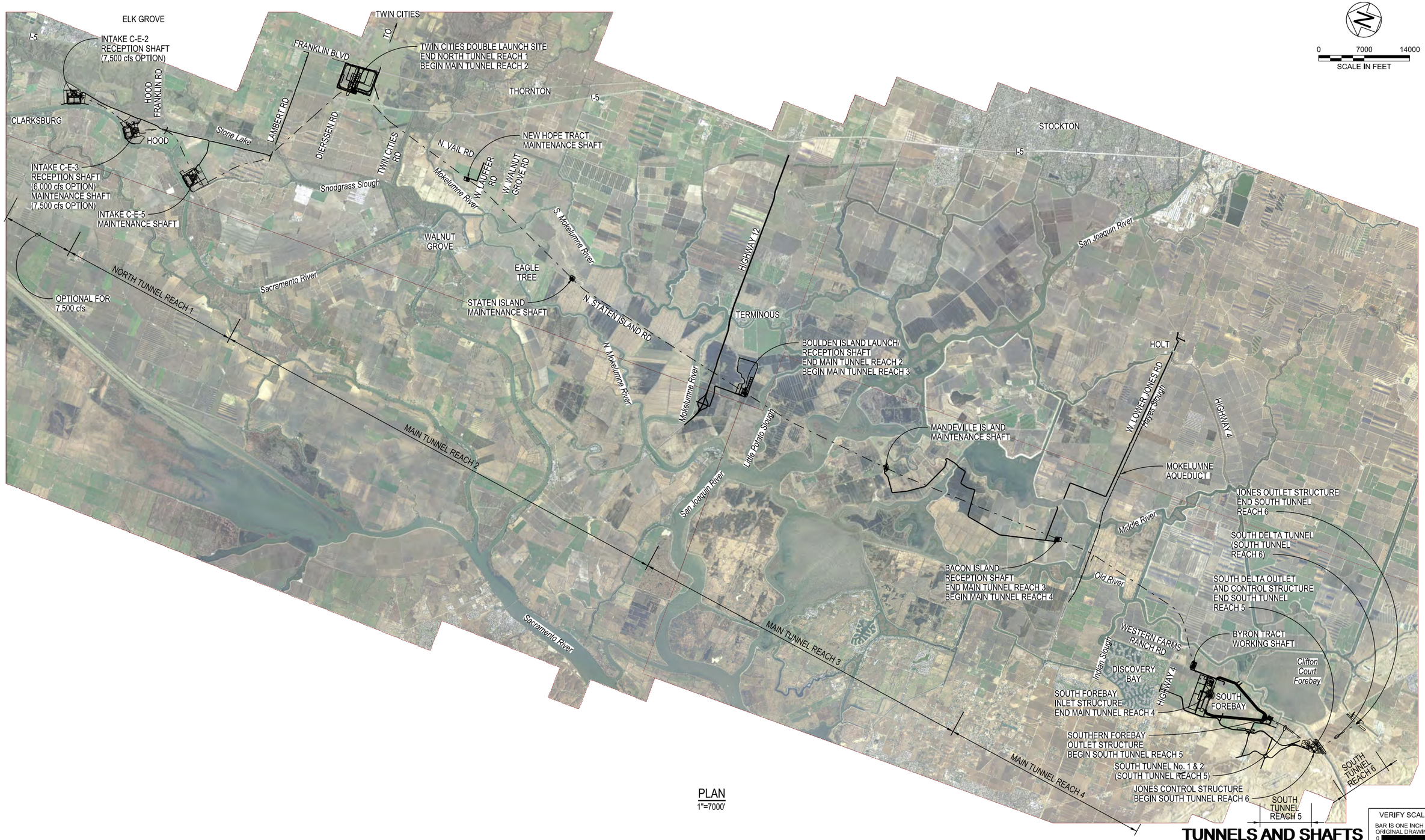

PLAN
1"=7000'

TUNNELS AND SHAFTS

VERIFY SCALE
BAR IS ONE INCH ON ORIGINAL DRAWING.
0 1"

REV	DATE	DESCRIPTION	SUB.	APPD
	12/23/2021	FINAL DRAFT BASELINE DRAWINGS		

DESIGNED: MARTIN ELLIS
DRAWN: RUSSELL TORADO
CHECKED: STEVE DUBNEWYCH
APPROVAL RECOMMENDED
APPROVAL BY

DELTA CONVEYANCE DESIGN & CONSTRUCTION AUTHORITY

ENGINEERING PROJECT REPORT
DELTA CONVEYANCE PROJECT
SINGLE TUNNEL - CENTRAL CORRIDOR

OVERALL SITE MAP

PROJECT NO. W8X97000
SHEET NO. STC-G-0010TN
REV
SEQUENCE NO.

STC-G-0010TN_W8X97000.dgn

PLOT DATE:12/13/2021 PLOT TIME:10:32:47 AM

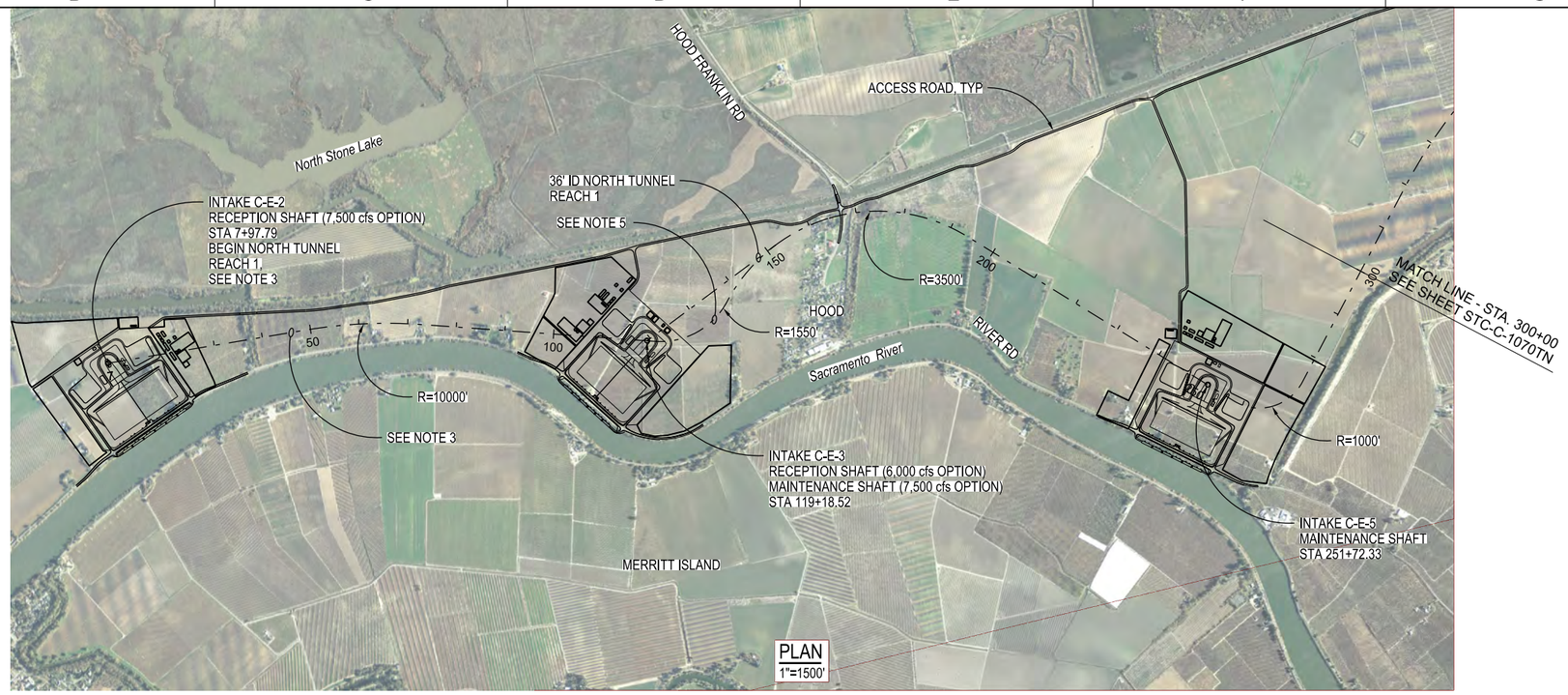

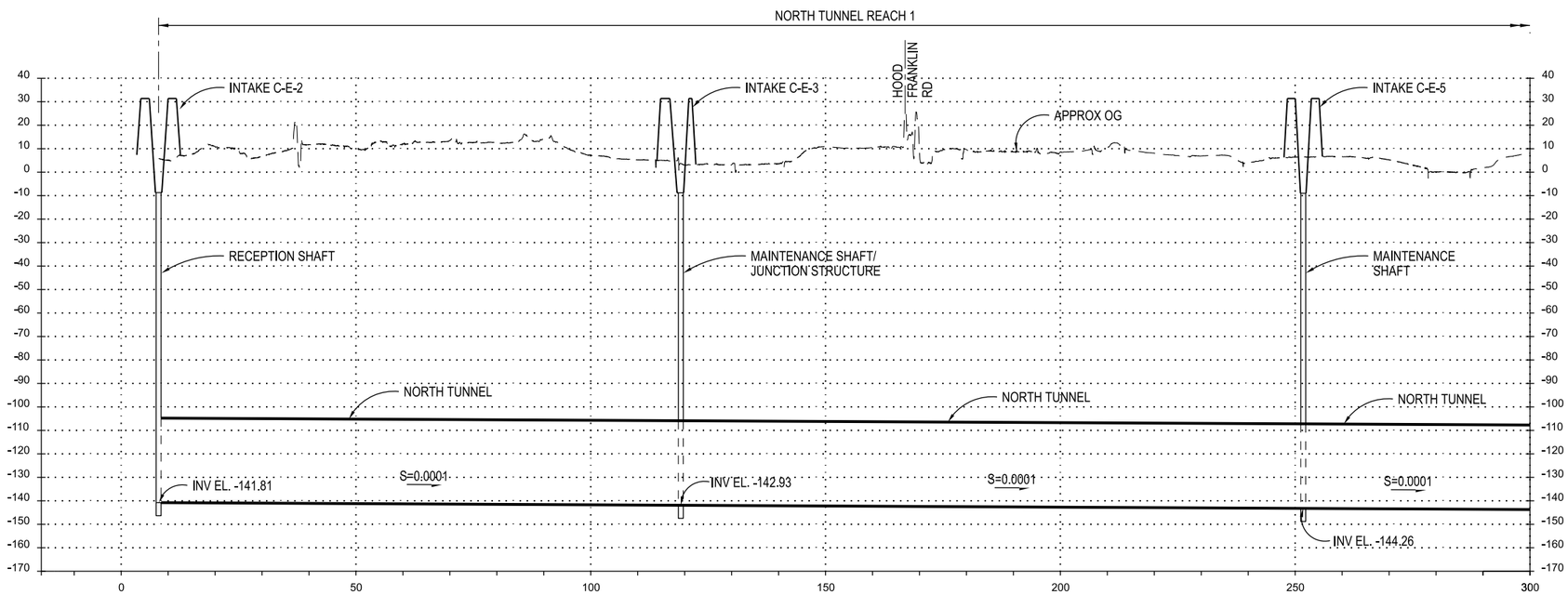

PROFILE

VERTICAL EXAGGERATION = x50

0 1500 3000

SCALE IN FEET

NOTES:

1. ALT 36' ID TUNNEL SHOWN FOR 6,000 cfs.
2. TOPOGRAPHY DATA IS BASED ON USGS NATIONAL ELEVATION DATASET (NED). DATA IS FOR CONCEPTUAL USE ONLY.
3. INTAKE C-E-2 AND TUNNEL BETWEEN STA 13+00.64 AND 124+13.90 SHOWN ONLY FOR 7,500 cfs OPTION.
4. SEE SHAFT SITE PLANS FOR DISTURBANCE LIMITS.
5. CURVED SECTION TO BE USED FOR 7,500 CFS OPTION ONLY, LENGTH NOT REFLECTED IN PROFILE BELOW.

TUNNELS AND SHAFTS

VERIFY SCALE
BAR IS ONE INCH ON ORIGINAL DRAWING.
0 1"

REV	DATE	DESCRIPTION	SUB.	APPD
	12/23/2021	FINAL DRAFT BASELINE DRAWINGS		

DESIGNED: MARTIN ELLIS
DRAWN: RUSSELL TORADO
CHECKED: STEVE DUBNEWYCH
APPROVAL RECOMMENDED
APPROVAL BY

DELTA CONVEYANCE DESIGN & CONSTRUCTION AUTHORITY

ENGINEERING PROJECT REPORT
DELTA CONVEYANCE PROJECT
SINGLE TUNNEL - CENTRAL CORRIDOR

NORTH TUNNEL
PLAN AND PROFILE - SHEET 1 OF 2

PROJECT NO. W8X97000
SHEET NO. STC-C-1060TN
REV
SEQUENCE NO.

STC-C-1060TN_W8X97000.dgn

PLOT DATE:12/13/2021 PLOT TIME:10:33:39 AM

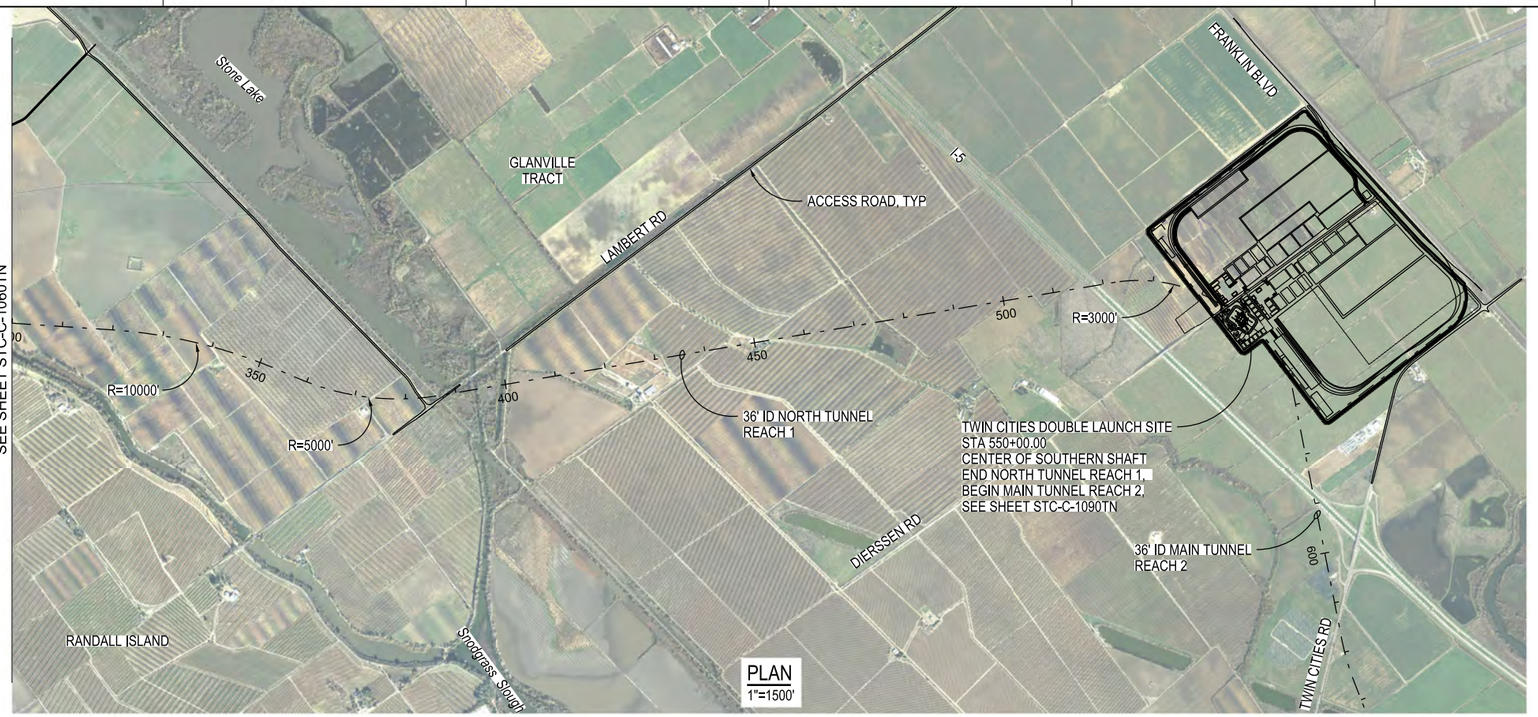

PLAN
1"=1500'

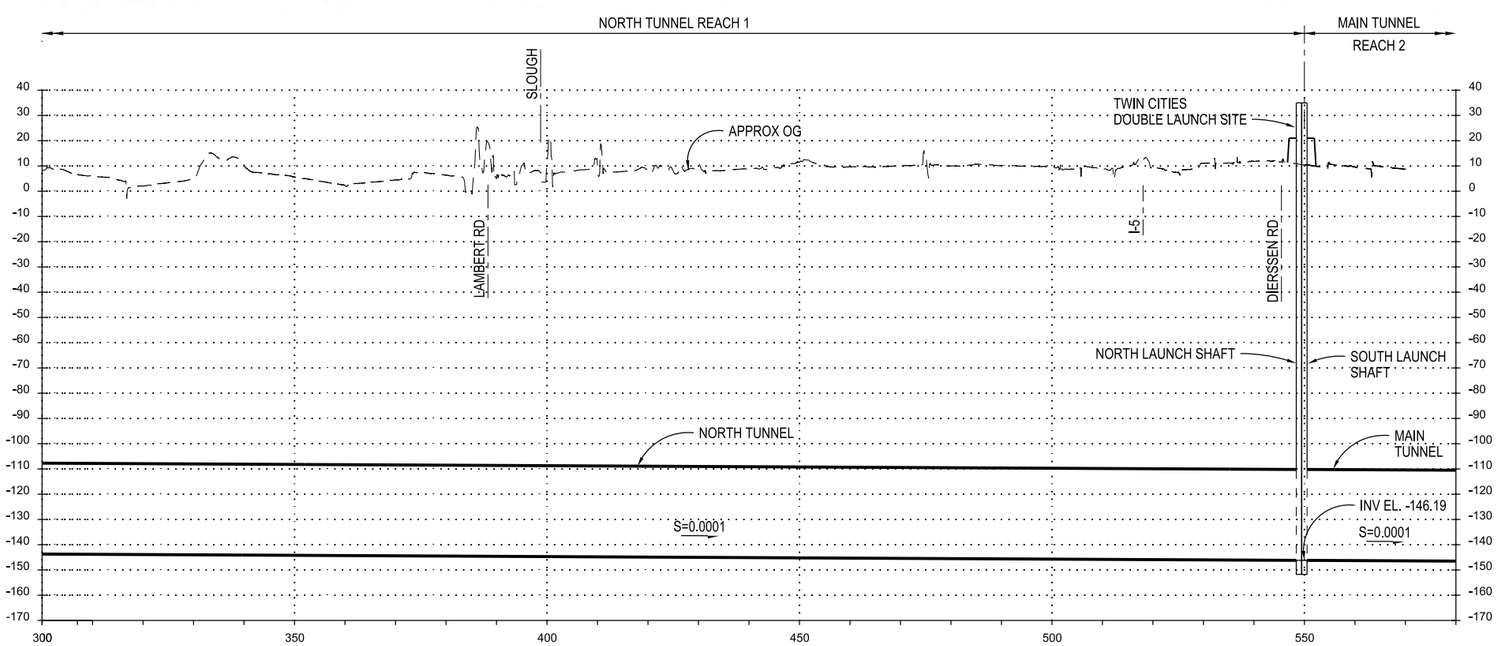

PROFILE
VERTICAL EXAGGERATION = x50

0 1500 3000
SCALE IN FEET

NOTES:

1. ALT 36' ID TUNNEL SHOWN FOR 6,000 cfs.
2. TOPOGRAPHY DATA IS BASED ON USGS NATIONAL ELEVATION DATASET (NED). DATA IS FOR CONCEPTUAL USE ONLY.
3. SEE SHAFT SITE PLANS FOR DISTURBANCE LIMITS.

TUNNELS AND SHAFTS

VERIFY SCALE
BAR IS ONE INCH ON ORIGINAL DRAWING.
0 1"

REV	DATE	DESCRIPTION	SUB.	APPD
	12/23/2021	FINAL DRAFT BASELINE DRAWINGS		

DESIGNED: MARTIN ELLIS
DRAWN: RUSSELL TORADO
CHECKED: STEVE DUBNEWYCH
APPROVAL RECOMMENDED
APPROVAL BY

DELTA CONVEYANCE DESIGN & CONSTRUCTION AUTHORITY

ENGINEERING PROJECT REPORT
DELTA CONVEYANCE PROJECT
SINGLE TUNNEL - CENTRAL CORRIDOR

NORTH TUNNEL
PLAN AND PROFILE - SHEET 2 OF 2

PROJECT NO. W8X97000
SHEET NO. STC-C-1070TN
REV
SEQUENCE NO.

STC-C-1070TN_W8X97000.dgn

PLOT DATE:11/11/2021 PLOT TIME:12:07:18 PM

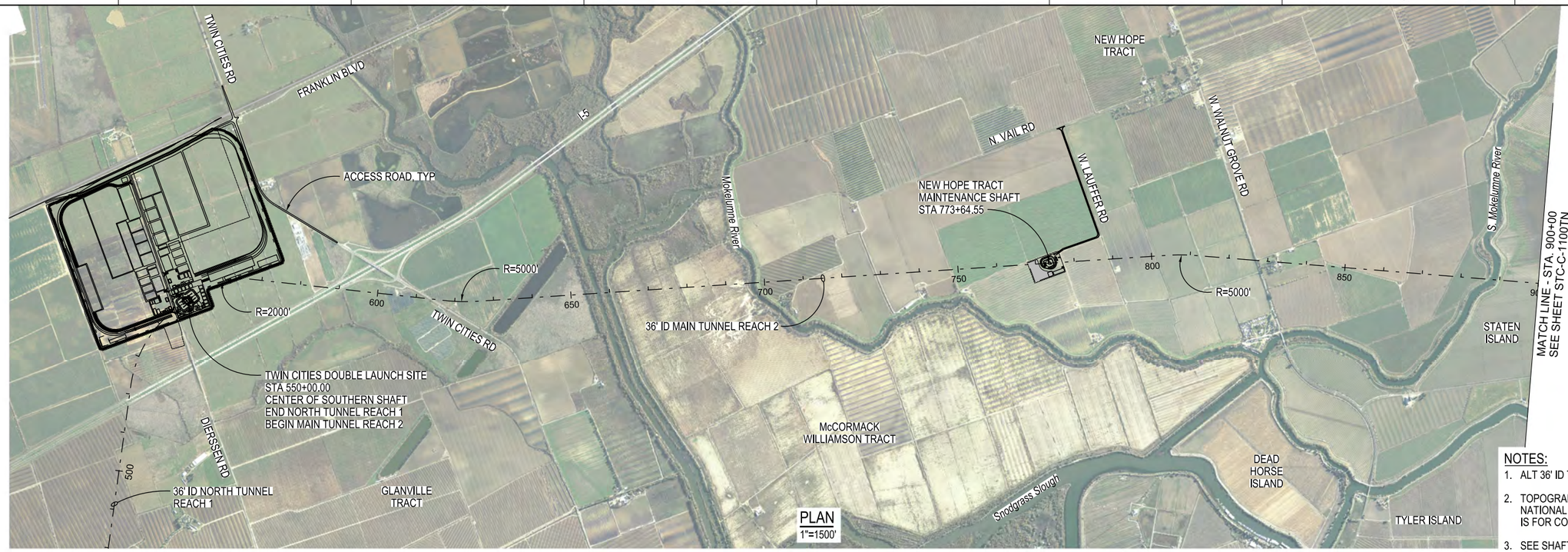

PLAN
1"=1500'

NOTES:

1. ALT 36' ID TUNNEL SHOWN FOR 6,000 cfs.
2. TOPOGRAPHY DATA IS BASED ON USGS NATIONAL ELEVATION DATASET (NED). DATA IS FOR CONCEPTUAL USE ONLY.
3. SEE SHAFT SITE PLANS FOR DISTURBANCE LIMITS.

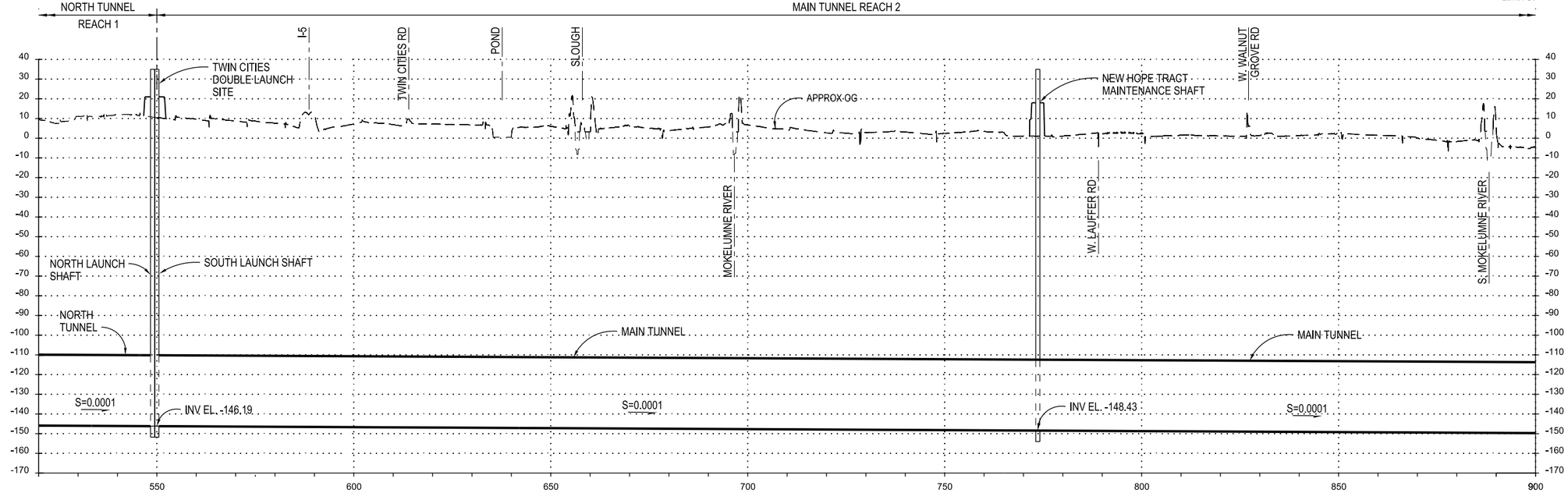

PROFILE
VERTICAL EXAGGERATION = x50

TUNNELS AND SHAFTS

VERIFY SCALE
BAR IS ONE INCH ON ORIGINAL DRAWING.
0 1"

REV	DATE	DESCRIPTION	SUB.	APPD
	12/23/2021	FINAL DRAFT BASELINE DRAWINGS		

DESIGNED: MARTIN ELLIS
DRAWN: RUSSELL TORADO
CHECKED: STEVE DUBNEWYCH
APPROVAL RECOMMENDED
APPROVAL BY

DELTA CONVEYANCE DESIGN & CONSTRUCTION AUTHORITY

ENGINEERING PROJECT REPORT
DELTA CONVEYANCE PROJECT
SINGLE TUNNEL - CENTRAL CORRIDOR

MAIN TUNNEL
PLAN AND PROFILE - SHEET 1 of 4

PROJECT NO. W8X97000
SHEET NO. STC-C-1090TN
REV
SEQUENCE NO.

STC-C-1090TN_W8X97000.dgn

PLOT DATE:11/11/2021 PLOT TIME:12:07:14 PM

PLAN
1"=1500'

NOTES:

1. ALT 36' ID TUNNEL SHOWN FOR 6,000 cfs.
2. TOPOGRAPHY DATA IS BASED ON USGS NATIONAL ELEVATION DATASET (NED). DATA IS FOR CONCEPTUAL USE ONLY.
3. SEE SHAFT SITE PLANS FOR DISTURBANCE LIMITS.

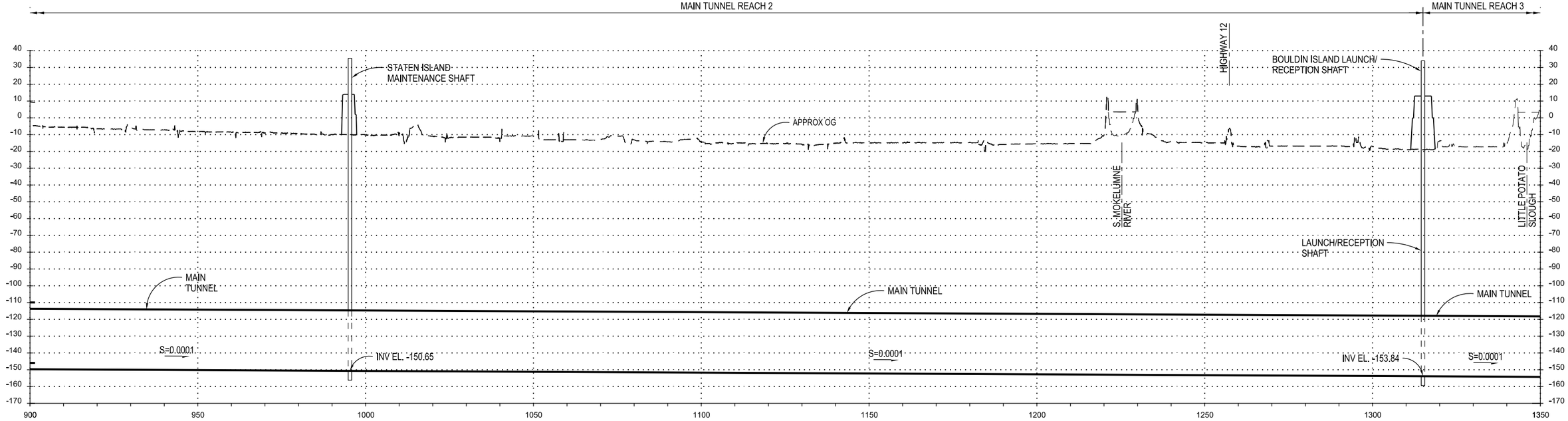

PROFILE
VERTICAL EXAGGERATION = x50

TUNNELS AND SHAFTS

VERIFY SCALE
BAR IS ONE INCH ON ORIGINAL DRAWING.
0 1"

REV	DATE	DESCRIPTION	SUB.	APPD
	12/23/2021	FINAL DRAFT BASELINE DRAWINGS		

DESIGNED: MARTIN ELLIS
DRAWN: RUSSELL TORADO
CHECKED: STEVE DUBNEWYCH
APPROVAL RECOMMENDED
APPROVAL BY

DELTA CONVEYANCE DESIGN & CONSTRUCTION AUTHORITY

ENGINEERING PROJECT REPORT
DELTA CONVEYANCE PROJECT
SINGLE TUNNEL - CENTRAL CORRIDOR

MAIN TUNNEL
PLAN AND PROFILE - SHEET 2 of 4

PROJECT NO. W8X97000
SHEET NO. STC-C-1100TN
REV
SEQUENCE NO.

STC-C-1100TN_W8X97000.dgn

PLOT DATE:11/11/2021 PLOT TIME:12:07:15 PM

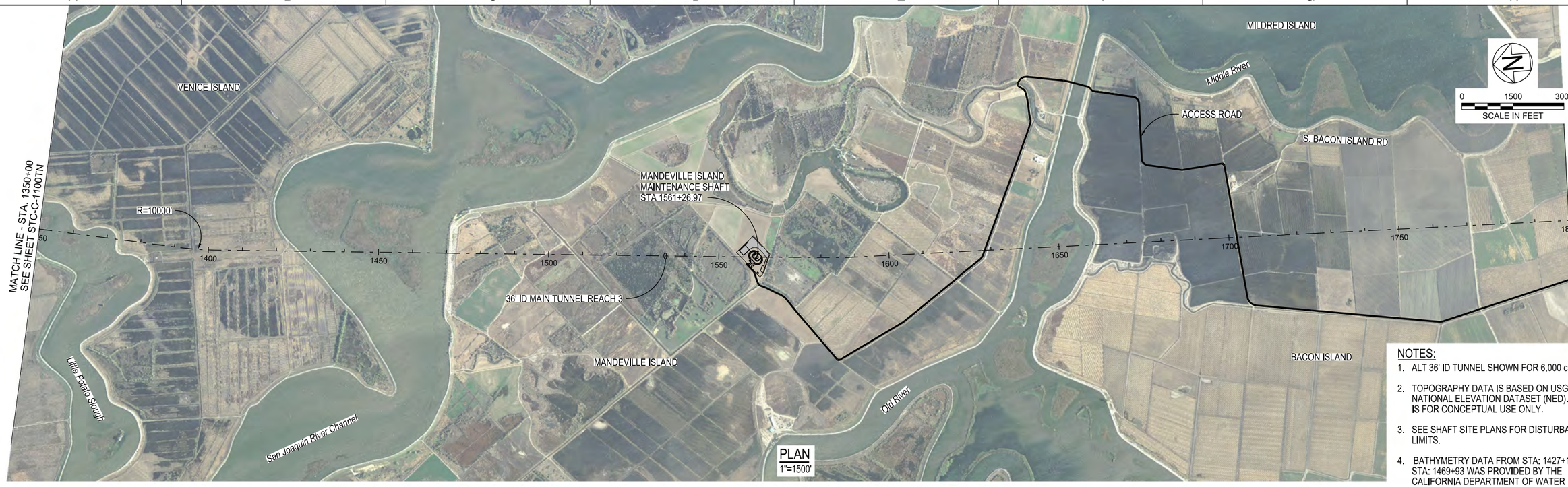

PLAN
1"=1500'

NOTES:

1. ALT 36' ID TUNNEL SHOWN FOR 6,000 cfs.
2. TOPOGRAPHY DATA IS BASED ON USGS NATIONAL ELEVATION DATASET (NED). DATA IS FOR CONCEPTUAL USE ONLY.
3. SEE SHAFT SITE PLANS FOR DISTURBANCE LIMITS.
4. BATHYMETRY DATA FROM STA: 1427+15 TO STA: 1469+93 WAS PROVIDED BY THE CALIFORNIA DEPARTMENT OF WATER RESOURCES.

MAIN TUNNEL REACH 3

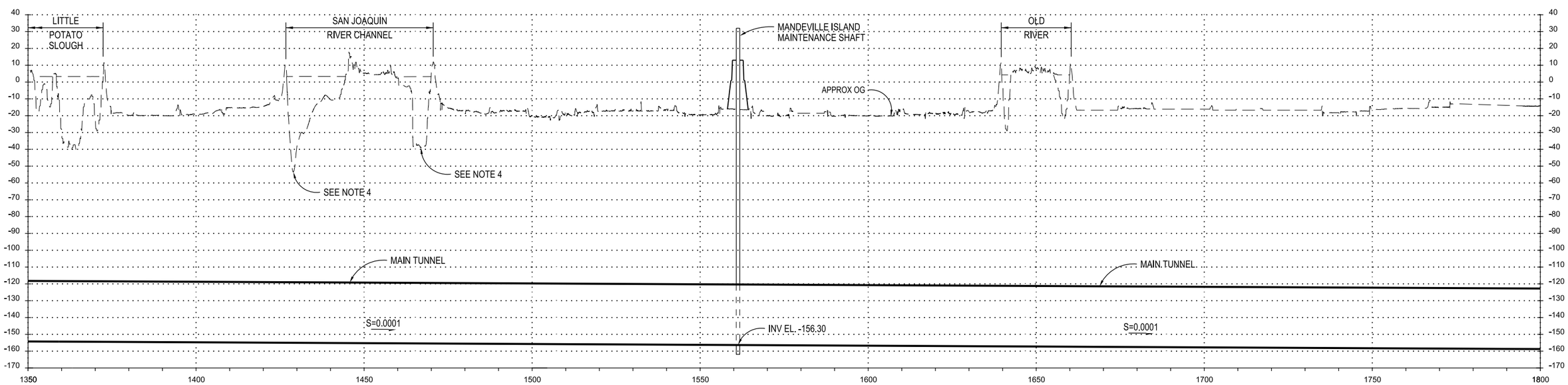

PROFILE
VERTICAL EXAGGERATION = x50

TUNNELS AND SHAFTS

VERIFY SCALE
BAR IS ONE INCH ON ORIGINAL DRAWING.
0 1"

REV	DATE	DESCRIPTION	SUB.	APPD
	12/23/2021	FINAL DRAFT BASELINE DRAWINGS		

DESIGNED: MARTIN ELLIS
DRAWN: RUSSELL TORADO
CHECKED: STEVE DUBNEWYCH
APPROVAL RECOMMENDED
APPROVAL BY

DELTA CONVEYANCE DESIGN & CONSTRUCTION AUTHORITY

ENGINEERING PROJECT REPORT
DELTA CONVEYANCE PROJECT
SINGLE TUNNEL - CENTRAL CORRIDOR

MAIN TUNNEL
PLAN AND PROFILE - SHEET 3 of 4

PROJECT NO. W8X97000
SHEET NO. STC-C-1110TN
REV
SEQUENCE NO.

STC-C-1110TN_W8X97000.dgn

PLOT DATE:11/11/2021 PLOT TIME:12:06:21 PM

NOTES:

1. ALT 36' ID TUNNEL SHOWN FOR 6,000 cfs.
2. TOPOGRAPHY DATA IS BASED ON USGS NATIONAL ELEVATION DATASET (NED). DATA IS FOR CONCEPTUAL USE ONLY.
3. SEE SHAFT SITE PLANS FOR DISTURBANCE LIMITS.

PLAN
1"=1500'

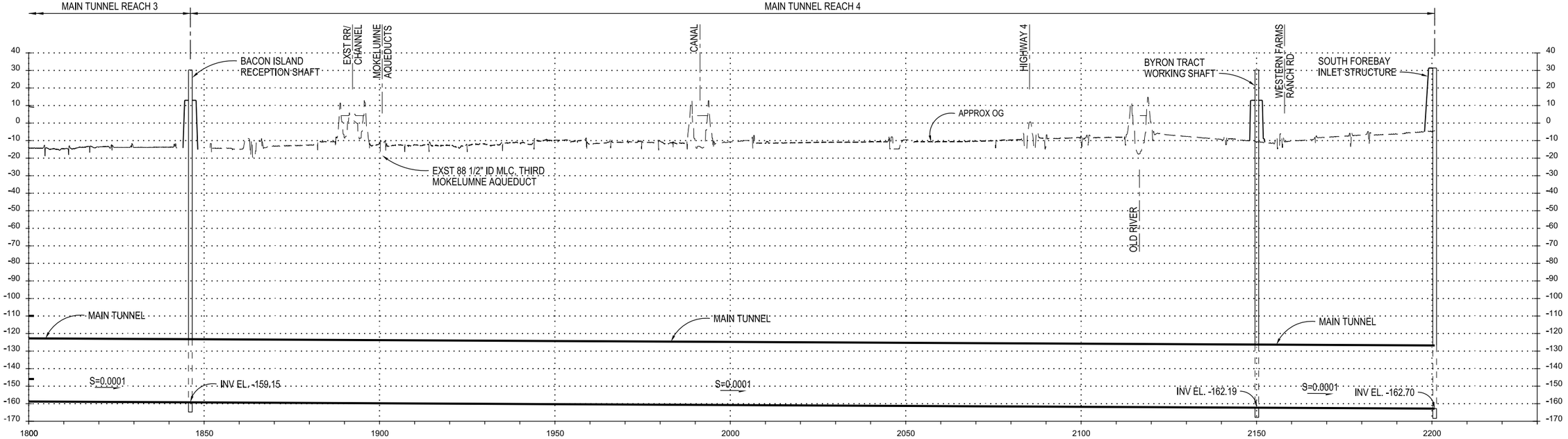

PROFILE
VERTICAL EXAGGERATION = x50

TUNNELS AND SHAFTS

VERIFY SCALE
BAR IS ONE INCH ON ORIGINAL DRAWING.
0 1"

REV	DATE	DESCRIPTION	SUB.	APPD
	12/23/2021	FINAL DRAFT BASELINE DRAWINGS		

DESIGNED: MARTIN ELLIS
DRAWN: RUSSELL TORADO
CHECKED: STEVE DUBNEWYCH
APPROVAL RECOMMENDED
APPROVAL BY

DCA
DELTA CONVEYANCE DESIGN & CONSTRUCTION AUTHORITY

ENGINEERING PROJECT REPORT
DELTA CONVEYANCE PROJECT
SINGLE TUNNEL - CENTRAL CORRIDOR

MAIN TUNNEL
PLAN AND PROFILE - SHEET 4 of 4

PROJECT NO. W8X97000
SHEET NO. STC-C-1120TN
REV
SEQUENCE NO.

STC-C-1120TN_W8X97000.dgn

PLOT DATE:11/11/2021 PLOT TIME:12:06:15 PM

PLAN
1"=400'

NOTES:

1. ALT 38' ID TUNNELS SHOWN FOR 6,000 cfs.
2. TOPOGRAPHY DATA IS BASED ON USGS NATIONAL ELEVATION DATASET (NED). DATA IS FOR CONCEPTUAL USE ONLY.
3. SEE SOUTHERN FOREBAY COMPLEX FOR DISTURBANCE LIMITS.

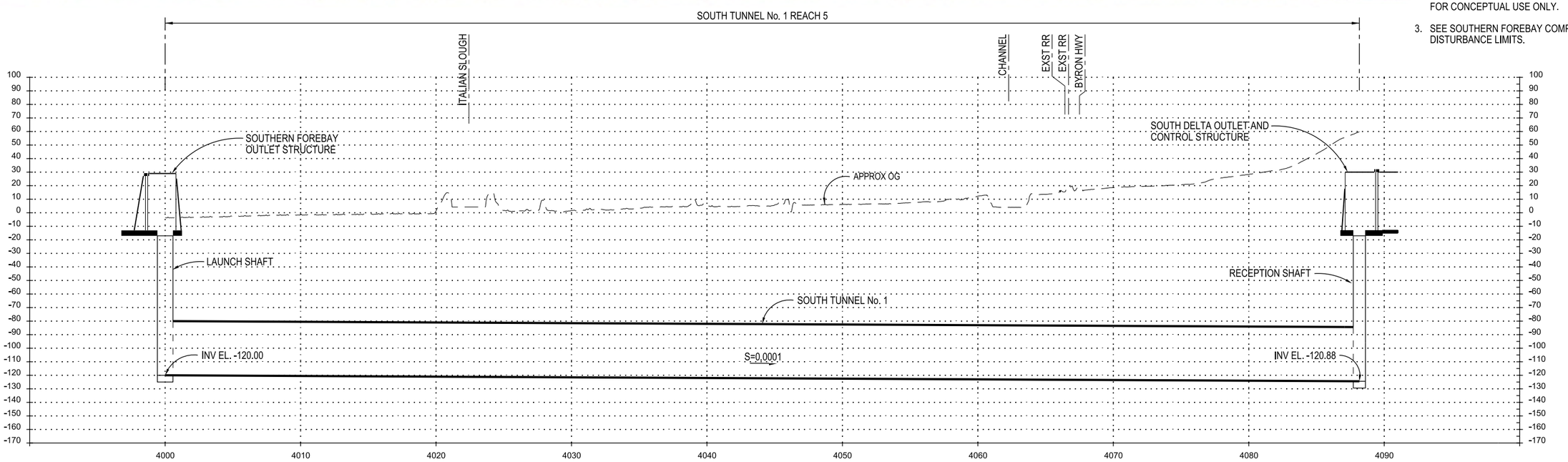

PROFILE
VERTICAL EXAGGERATION = x10

TUNNELS AND SHAFTS

VERIFY SCALE
BAR IS ONE INCH ON ORIGINAL DRAWING.
0 1"

REV	DATE	DESCRIPTION	SUB.	APPD
	12/23/2021	FINAL DRAFT BASELINE DRAWINGS		

DESIGNED: MARTIN ELLIS
DRAWN: RUSSELL TORADO
CHECKED: STEVE DUBNEWYCH
APPROVAL RECOMMENDED
APPROVAL BY

DELTA CONVEYANCE DESIGN & CONSTRUCTION AUTHORITY

ENGINEERING PROJECT REPORT
DELTA CONVEYANCE PROJECT
SINGLE TUNNEL - CENTRAL CORRIDOR

SOUTH TUNNEL No. 1
PLAN AND PROFILE

PROJECT NO. W8X97000
SHEET NO. STC-C-1130TN
REV
SEQUENCE NO.

STC-C-1130TN_W8X97000.dgn

PLOT DATE:11/11/2021 PLOT TIME:12:07:51 PM

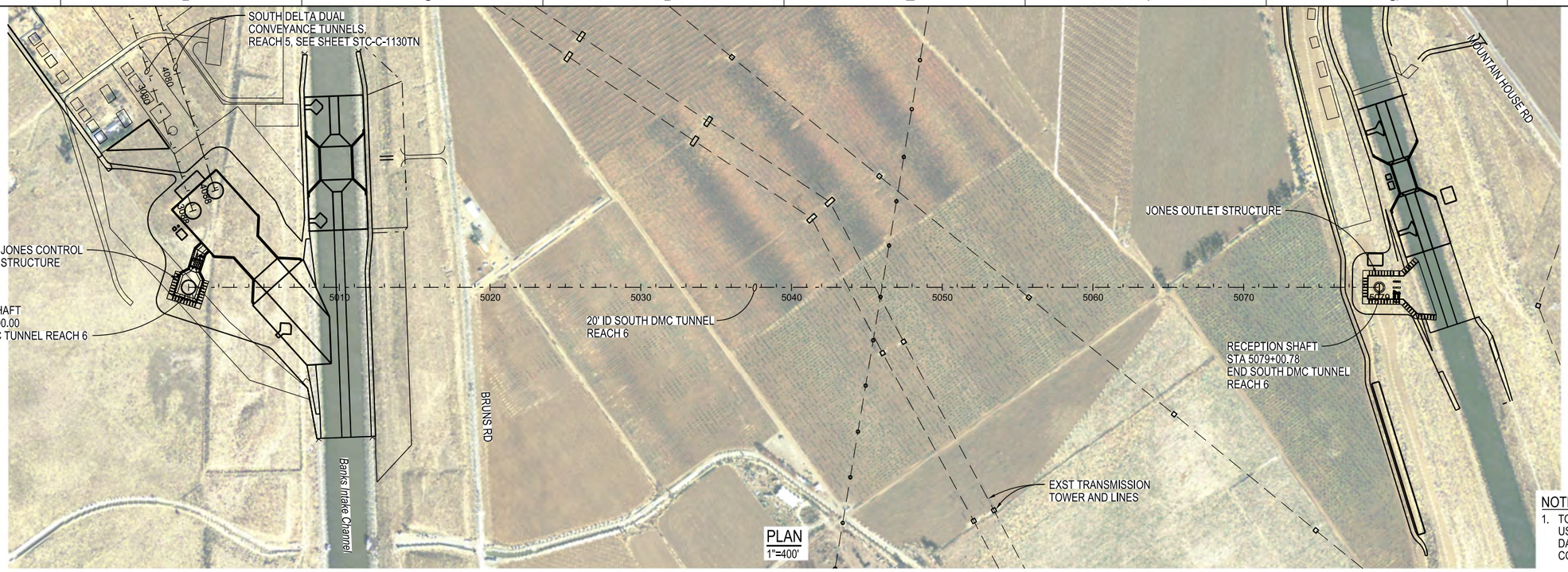

PLAN
1"=400'

0 400 800
SCALE IN FEET

NOTES:

1. TOPOGRAPHY DATA IS BASED ON USGS NATIONAL ELEVATION DATASET (NED). DATA IS FOR CONCEPTUAL USE ONLY.
2. SEE SOUTHERN FOREBAY COMPLEX FOR DISTURBANCE LIMITS.
3. 20' ID SOUTH DMC TUNNEL SHOWN FOR 7,500 OPTION

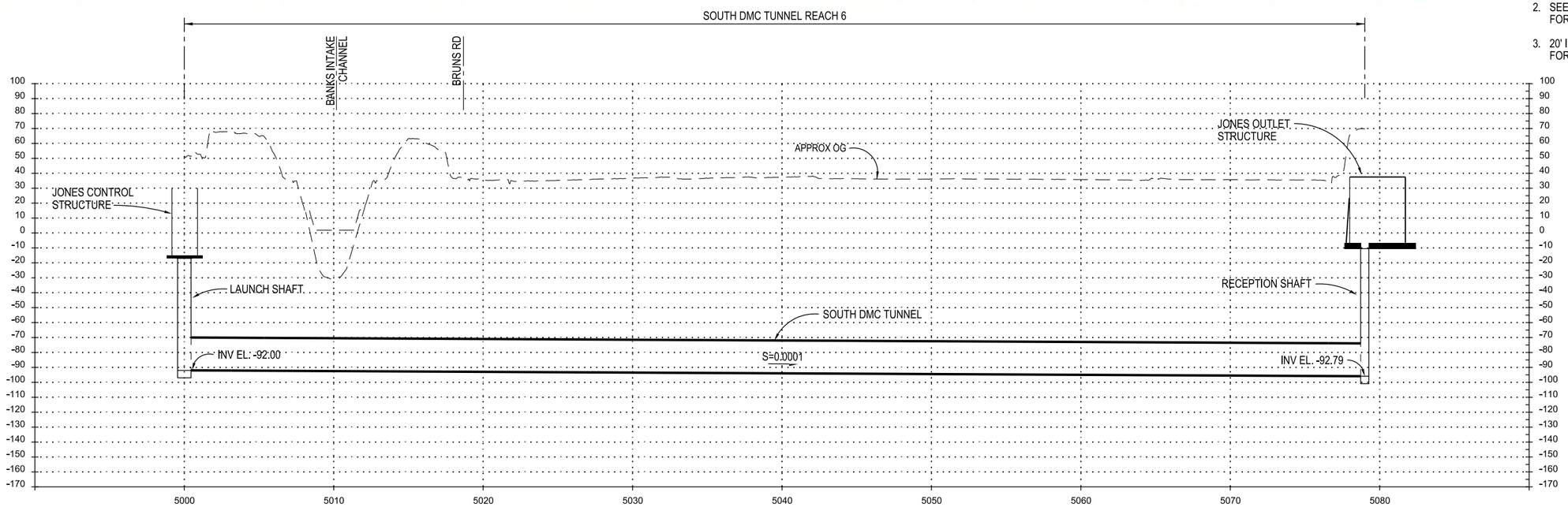

PROFILE
VERTICAL EXAGGERATION = x10

TUNNELS AND SHAFTS

VERIFY SCALE
BAR IS ONE INCH ON ORIGINAL DRAWING.
0 1"

REV	DATE	DESCRIPTION	SUB.	APPD
	12/23/2021	FINAL DRAFT BASELINE DRAWINGS		

DESIGNED: MARTIN ELLIS
DRAWN: RUSSELL TORADO
CHECKED: STEVE DUBNEWYCH
APPROVAL RECOMMENDED
APPROVAL BY

DELTA CONVEYANCE DESIGN & CONSTRUCTION AUTHORITY

ENGINEERING PROJECT REPORT
DELTA CONVEYANCE PROJECT
SINGLE TUNNEL - CENTRAL CORRIDOR

SOUTH DMC TUNNEL
PLAN AND PROFILE

PROJECT NO. W8X97000
SHEET NO. STC-C-1140TN
REV
SEQUENCE NO.

STC-C-1140TN_W8X97000.dgn

PLOT DATE:11/11/2021 PLOT TIME:12:08:34 PM

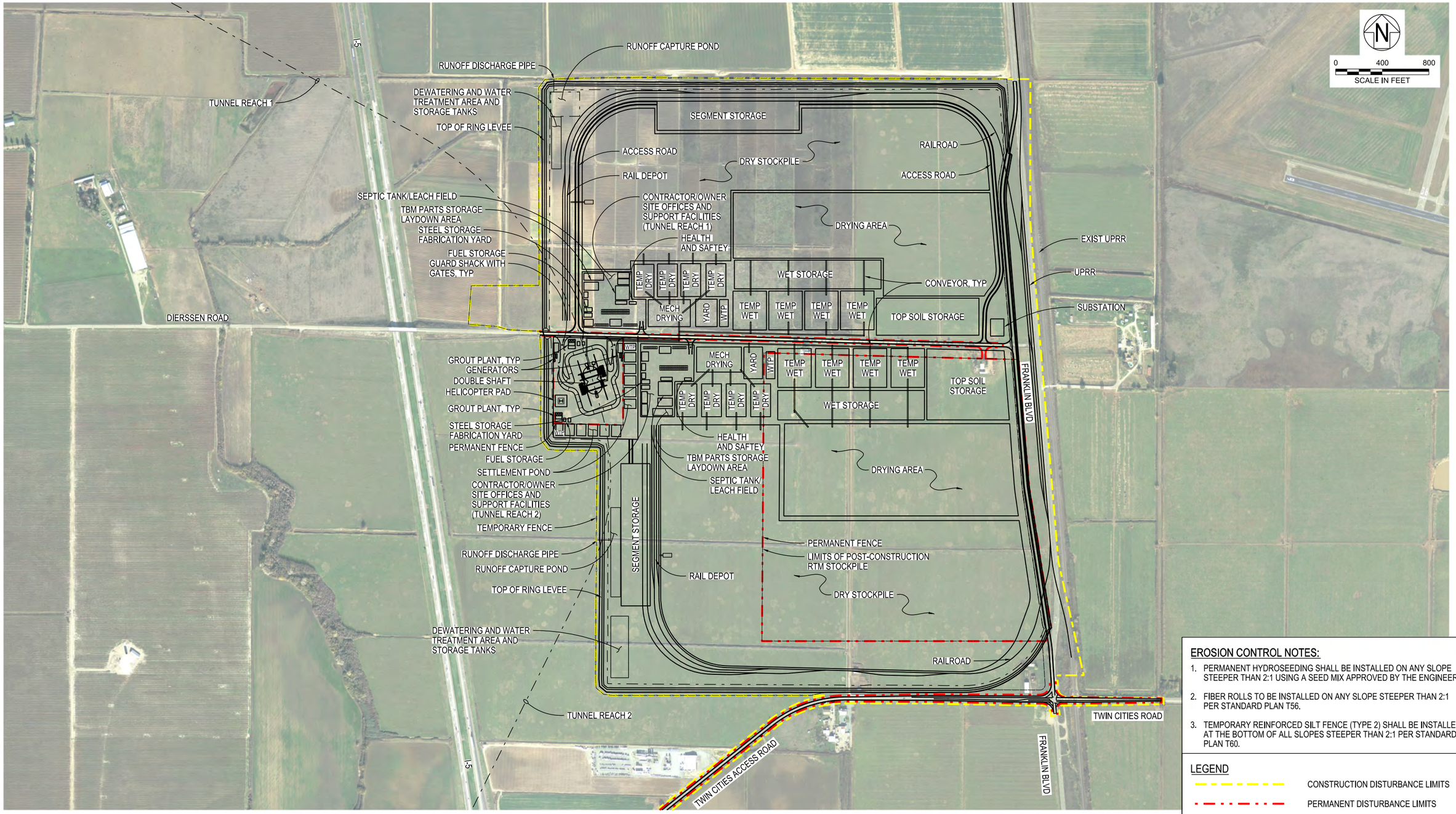

EROSION CONTROL NOTES:

1. PERMANENT HYDROSEEDING SHALL BE INSTALLED ON ANY SLOPE STEEPER THAN 2:1 USING A SEED MIX APPROVED BY THE ENGINEER.
2. FIBER ROLLS TO BE INSTALLED ON ANY SLOPE STEEPER THAN 2:1 PER STANDARD PLAN T56.
3. TEMPORARY REINFORCED SILT FENCE (TYPE 2) SHALL BE INSTALLED AT THE BOTTOM OF ALL SLOPES STEEPER THAN 2:1 PER STANDARD PLAN T60.

LEGEND

- CONSTRUCTION DISTURBANCE LIMITS
- PERMANENT DISTURBANCE LIMITS

PLAN
1"=400'

TUNNELS AND SHAFTS

VERIFY SCALE
BAR IS ONE INCH ON ORIGINAL DRAWING.
0 1"

REV	DATE	DESCRIPTION	SUB.	APPD
	12/23/2021	FINAL DRAFT BASELINE DRAWINGS		

DESIGNED: MARTIN ELLIS
DRAWN: RUSSELL TORADO
CHECKED: STEVE DUBNEWYCH
APPROVAL RECOMMENDED
APPROVAL BY

DELTA CONVEYANCE DESIGN & CONSTRUCTION AUTHORITY

ENGINEERING PROJECT REPORT
DELTA CONVEYANCE PROJECT
SINGLE TUNNEL - CENTRAL CORRIDOR

TWIN CITIES DBL LAUNCH SHAFT SITE PLAN DISTURBANCE LIMITS

PROJECT NO. W8X97000
SHEET NO. STC-C-1160TN
REV
SEQUENCE NO.

STC-C-1160TN_W8X97000.dgn

PLOT DATE:11/11/2021 PLOT TIME:12:09:24 PM

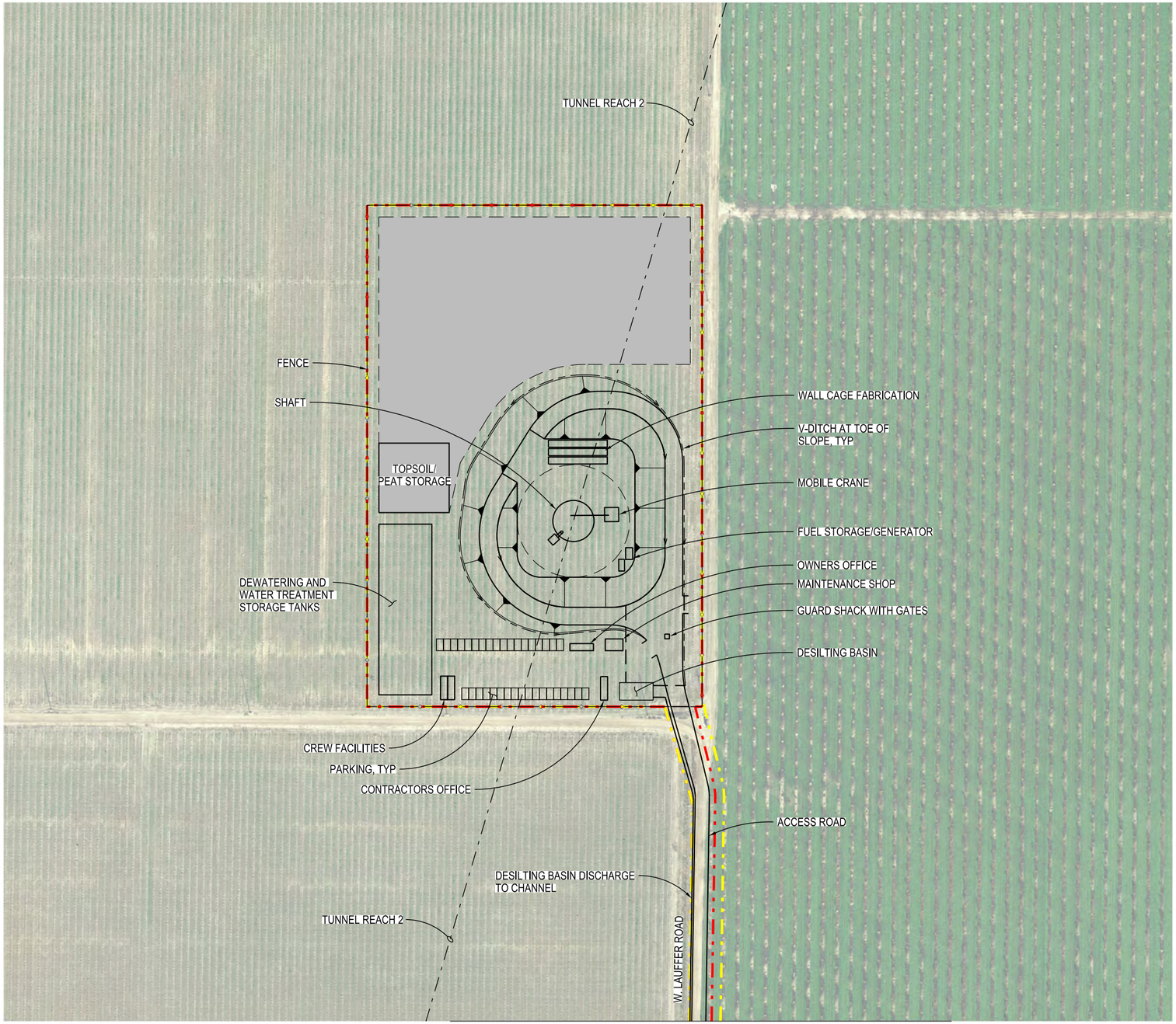

PLAN
1"=100'

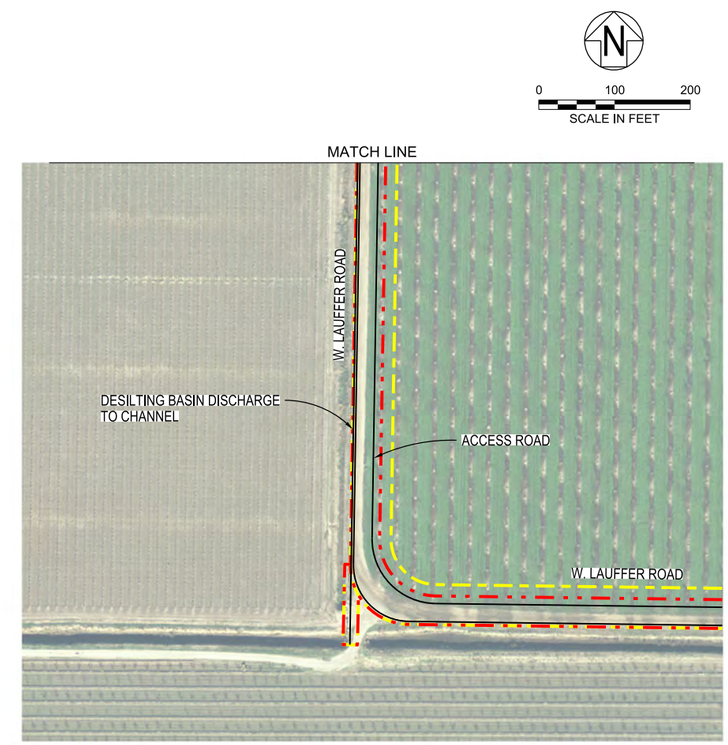

EROSION CONTROL NOTES:

1. PERMANENT HYDROSEEDING SHALL BE INSTALLED ON ANY SLOPE STEEPER THAN 2:1 USING A SEED MIX APPROVED BY THE ENGINEER.
2. FIBER ROLLS TO BE INSTALLED ON ANY SLOPE STEEPER THAN 2:1 PER STANDARD PLAN T56.
3. TEMPORARY REINFORCED SILT FENCE (TYPE 2) SHALL BE INSTALLED AT THE BOTTOM OF ALL SLOPES STEEPER THAN 2:1 PER STANDARD PLAN T60.

LEGEND

- CONSTRUCTION DISTURBANCE LIMITS
- PERMANENT DISTURBANCE LIMITS
- PERMANENT SHAFT EXCAVATION STOCKPILE

TUNNELS AND SHAFTS

VERIFY SCALE
BAR IS ONE INCH ON ORIGINAL DRAWING.
0 1"

REV	DATE	DESCRIPTION	SUB.	APPD
	12/23/2021	FINAL DRAFT BASELINE DRAWINGS		

DESIGNED: MARTIN ELLIS
DRAWN: RUSSELL TORADO
CHECKED: STEVE DUBNEWYCH
APPROVAL RECOMMENDED
APPROVAL BY

DELTA CONVEYANCE DESIGN & CONSTRUCTION AUTHORITY

ENGINEERING PROJECT REPORT
DELTA CONVEYANCE PROJECT
SINGLE TUNNEL - CENTRAL CORRIDOR

NEW HOPE MAINTENANCE SHAFT SITE PLAN DISTURBANCE LIMITS

PROJECT NO. W8X97000
SHEET NO. STC-C-1170TN
REV
SEQUENCE NO.

STC-C-1170TN_W8X97000.dgn

PLOT DATE:11/11/2021 PLOT TIME:12:09:45 PM

EROSION CONTROL NOTES:

1. PERMANENT HYDROSEEDING SHALL BE INSTALLED ON ANY SLOPE STEEPER THAN 2:1 USING A SEED MIX APPROVED BY THE ENGINEER.
2. FIBER ROLLS TO BE INSTALLED ON ANY SLOPE STEEPER THAN 2:1 PER STANDARD PLAN T56.
3. TEMPORARY REINFORCED SILT FENCE (TYPE 2) SHALL BE INSTALLED AT THE BOTTOM OF ALL SLOPES STEEPER THAN 2:1 PER STANDARD PLAN T60.

LEGEND

- CONSTRUCTION DISTURBANCE LIMITS
- PERMANENT DISTURBANCE LIMITS
- PERMANENT SHAFT EXCAVATION STOCKPILE

PLAN
1"=100'

TUNNELS AND SHAFTS

VERIFY SCALE
BAR IS ONE INCH ON ORIGINAL DRAWING.
0 1"

REV	DATE	DESCRIPTION	SUB.	APPD
	12/23/2021	FINAL DRAFT BASELINE DRAWINGS		

DESIGNED: MARTIN ELLIS
DRAWN: RUSSELL TORADO
CHECKED: STEVE DUBNEWYCH
APPROVAL RECOMMENDED
APPROVAL BY

DELTA CONVEYANCE DESIGN & CONSTRUCTION AUTHORITY

ENGINEERING PROJECT REPORT
DELTA CONVEYANCE PROJECT
SINGLE TUNNEL - CENTRAL CORRIDOR

STATEN ISLAND MAINTENANCE SHAFT SITE PLAN DISTURBANCE LIMITS

PROJECT NO. W8X97000
SHEET NO. STC-C-1180TN
REV
SEQUENCE NO.

STC-C-1180TN_W8X97000.dgn

PLOT DATE:11/11/2021 PLOT TIME:12:07:16 PM

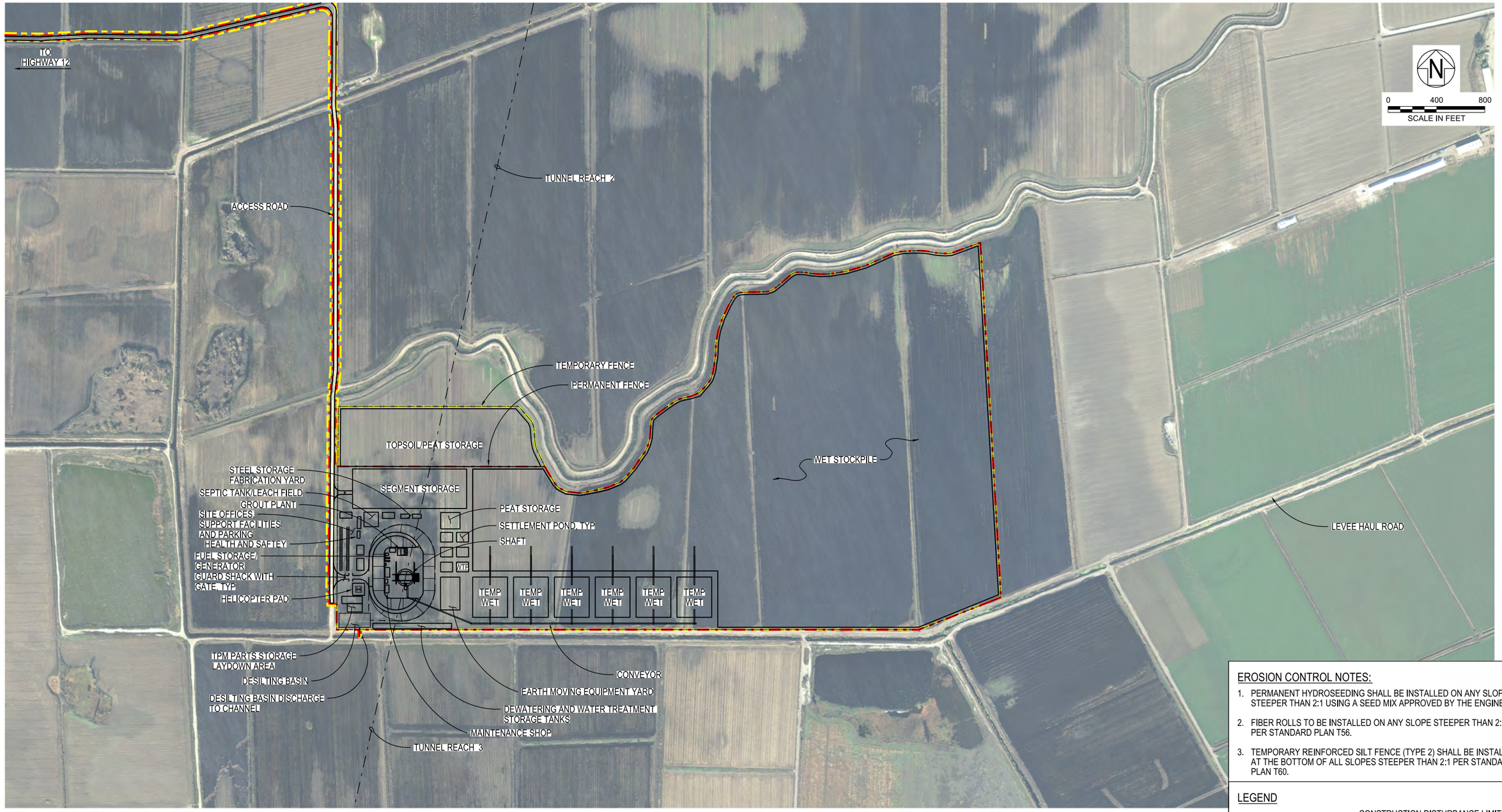

PLAN
1"=400'

EROSION CONTROL NOTES:

1. PERMANENT HYDROSEEDING SHALL BE INSTALLED ON ANY SLOPE STEEPER THAN 2:1 USING A SEED MIX APPROVED BY THE ENGINEER.
2. FIBER ROLLS TO BE INSTALLED ON ANY SLOPE STEEPER THAN 2:1 PER STANDARD PLAN T56.
3. TEMPORARY REINFORCED SILT FENCE (TYPE 2) SHALL BE INSTALLED AT THE BOTTOM OF ALL SLOPES STEEPER THAN 2:1 PER STANDARD PLAN T60.

LEGEND

CONSTRUCTION DISTURBANCE LIMITS

PERMANENT DISTURBANCE LIMITS

TUNNELS AND SHAFTS

VERIFY SCALE
BAR IS ONE INCH ON ORIGINAL DRAWING.
0 1"

REV	DATE	DESCRIPTION	SUB.	APPD
	12/23/2021	FINAL DRAFT BASELINE DRAWINGS		

DESIGNED: MARTIN ELLIS
DRAWN: RUSSELL TORADO
CHECKED: STEVE DUBNEWYCH
APPROVAL RECOMMENDED
APPROVAL BY

DELTA CONVEYANCE DESIGN & CONSTRUCTION AUTHORITY

ENGINEERING PROJECT REPORT
DELTA CONVEYANCE PROJECT
SINGLE TUNNEL - CENTRAL CORRIDOR

BOULDIN ISLAND LAUNCH/RECEPTION SITE PLAN DISTURBANCE LIMITS

PROJECT NO. W8X97000
SHEET NO. STC-C-1190TN
REV
SEQUENCE NO.

STC-C-1190TN_W8X97000.dgn

PLOT DATE:11/11/2021 PLOT TIME:12:11:51 PM

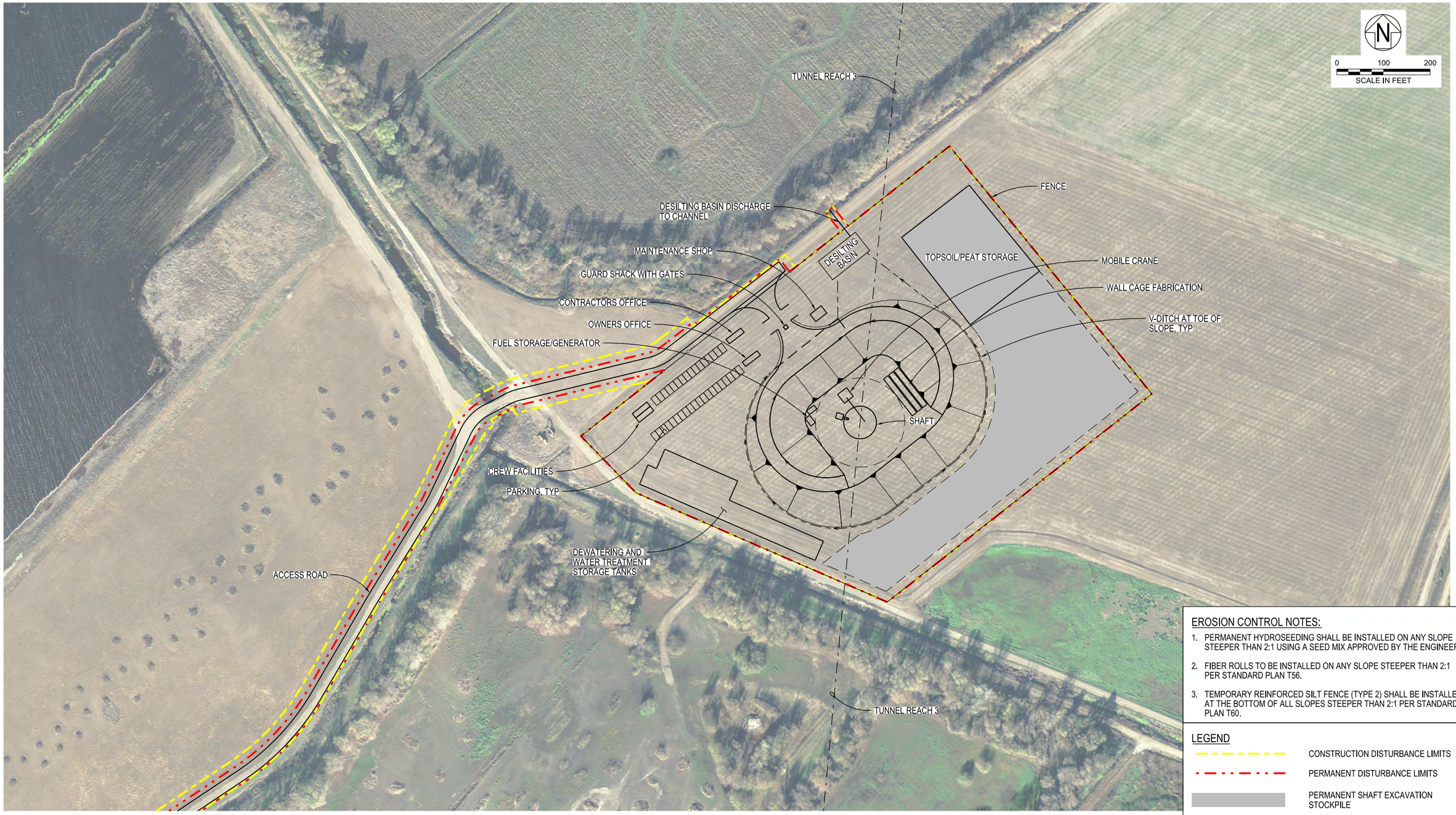

PLAN
1"=100'

EROSION CONTROL NOTES:

1. PERMANENT HYDROSEEDING SHALL BE INSTALLED ON ANY SLOPE STEEPER THAN 2:1 USING A SEED MIX APPROVED BY THE ENGINEER.
2. FIBER ROLLS TO BE INSTALLED ON ANY SLOPE STEEPER THAN 2:1 PER STANDARD PLAN T56.
3. TEMPORARY REINFORCED SILT FENCE (TYPE 2) SHALL BE INSTALLED AT THE BOTTOM OF ALL SLOPES STEEPER THAN 2:1 PER STANDARD PLAN T60.

LEGEND

- CONSTRUCTION DISTURBANCE LIMITS
- PERMANENT DISTURBANCE LIMITS
- PERMANENT SHAFT EXCAVATION STOCKPILE

TUNNELS AND SHAFTS

VERIFY SCALE
BAR IS ONE INCH ON ORIGINAL DRAWING.
0 1"

REV	DATE	DESCRIPTION	SUB.	APPD
	12/23/2021	FINAL DRAFT BASELINE DRAWINGS		

DESIGNED: MARTIN ELLIS
DRAWN: RUSSELL TORADO
CHECKED: STEVE DUBNEWYCH
APPROVAL RECOMMENDED
APPROVAL BY

DELTA CONVEYANCE DESIGN & CONSTRUCTION AUTHORITY

ENGINEERING PROJECT REPORT
DELTA CONVEYANCE PROJECT
SINGLE TUNNEL - CENTRAL CORRIDOR

MANDEVILLE ISLAND MAINT SHAFT SITE PLAN DISTURBANCE LIMITS

PROJECT NO. W8X97000
SHEET NO. STC-C-1200TN
REV
SEQUENCE NO.

STC-C-1200TN_W8X97000.dgn

PLOT DATE:11/11/2021 PLOT TIME:12:09:17 PM

PLAN
1"=100'

EROSION CONTROL NOTES:

1. PERMANENT HYDROSEEDING SHALL BE INSTALLED ON ANY SLOPE STEEPER THAN 2:1 USING A SEED MIX APPROVED BY THE ENGINEER.
2. FIBER ROLLS TO BE INSTALLED ON ANY SLOPE STEEPER THAN 2:1 PER STANDARD PLAN T56.
3. TEMPORARY REINFORCED SILT FENCE (TYPE 2) SHALL BE INSTALLED AT THE BOTTOM OF ALL SLOPES STEEPER THAN 2:1 PER STANDARD PLAN T60.

LEGEND

- CONSTRUCTION DISTURBANCE LIMITS
- PERMANENT DISTURBANCE LIMITS
- PERMANENT SHAFT EXCAVATION STOCKPILE

TUNNELS AND SHAFTS

VERIFY SCALE
BAR IS ONE INCH ON ORIGINAL DRAWING.
0 1"

REV	DATE	DESCRIPTION	SUB.	APPD
	12/23/2021	FINAL DRAFT BASELINE DRAWINGS		

DESIGNED: MARTIN ELLIS
DRAWN: RUSSELL TORADO
CHECKED: STEVE DUBNEWYCH
APPROVAL RECOMMENDED
APPROVAL BY

DCA
DELTA CONVEYANCE DESIGN & CONSTRUCTION AUTHORITY

ENGINEERING PROJECT REPORT
DELTA CONVEYANCE PROJECT
SINGLE TUNNEL - CENTRAL CORRIDOR

BACON ISLAND RECEPTION SHAFT SITE PLAN DISTURBANCE LIMITS

PROJECT NO. W8X97000
SHEET NO. STC-C-1210TN
REV
SEQUENCE NO.

STC-C-1210TN_W8X97000.dgn

PLOT DATE:11/11/2021 PLOT TIME:12:09:30 PM

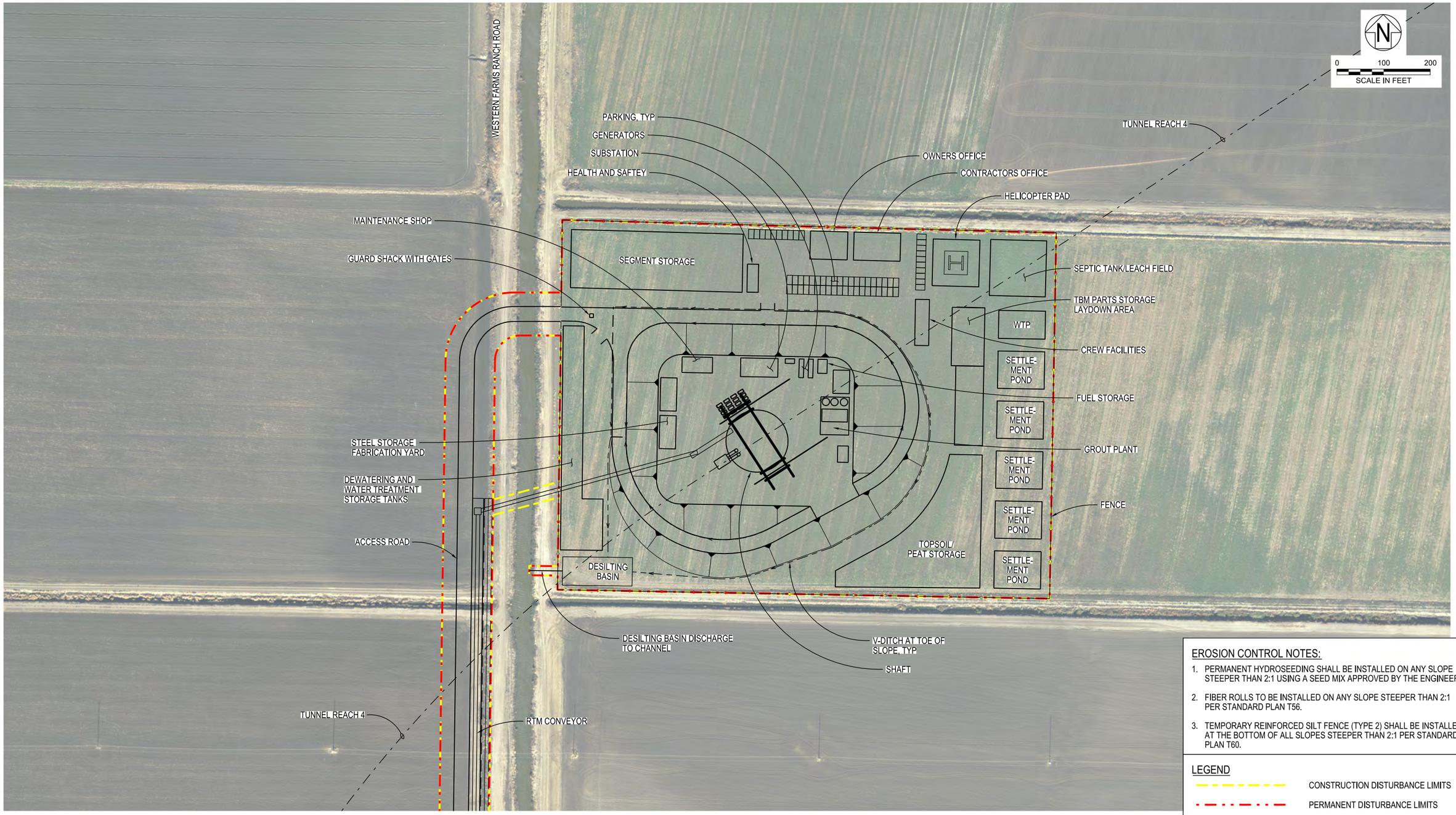

PLAN
1"=100'

EROSION CONTROL NOTES:

1. PERMANENT HYDROSEEDING SHALL BE INSTALLED ON ANY SLOPE STEEPER THAN 2:1 USING A SEED MIX APPROVED BY THE ENGINEER.
2. FIBER ROLLS TO BE INSTALLED ON ANY SLOPE STEEPER THAN 2:1 PER STANDARD PLAN T56.
3. TEMPORARY REINFORCED SILT FENCE (TYPE 2) SHALL BE INSTALLED AT THE BOTTOM OF ALL SLOPES STEEPER THAN 2:1 PER STANDARD PLAN T60.

LEGEND

- CONSTRUCTION DISTURBANCE LIMITS
- PERMANENT DISTURBANCE LIMITS

TUNNELS AND SHAFTS

VERIFY SCALE
BAR IS ONE INCH ON ORIGINAL DRAWING.
0 1"

REV	DATE	DESCRIPTION	SUB.	APPD
	12/23/2021	FINAL DRAFT BASELINE DRAWINGS		

DESIGNED: MARTIN ELLIS
DRAWN: RUSSELL TORADO
CHECKED: STEVE DUBNEWYCH
APPROVAL RECOMMENDED
APPROVAL BY

DCA
DELTA CONVEYANCE DESIGN & CONSTRUCTION AUTHORITY

ENGINEERING PROJECT REPORT
DELTA CONVEYANCE PROJECT
SINGLE TUNNEL - CENTRAL CORRIDOR

BYRON TRACT WORKING SHAFT SITE PLAN DISTURBANCE LIMITS

PROJECT NO. W8X97000
SHEET NO. STC-C-1220TN
REV
SEQUENCE NO.

STC-C-1220TN_W8X97000.dgn

PLOT DATE:11/11/2021 PLOT TIME:12:06:57 PM

NOTES:

1. CROSS SECTION SHOWN IS A GENERAL CONCEPT AND DOES NOT REFLECT DIMENSIONS SHOWN FOR EACH SHAFT LOCATION DRAWING.
2. SECTION SHOULD NOT BE USED TO CALCULATE VOLUMES.
3. AREA OF GROUND TREATMENT WOULD BE THE SAME AS THE PAD LEVEL AREA.
4. FOR SHAFT PAD DETAILS AT INTAKES STRUCTURES, SOUTHERN FOREBAY AND SOUTH DELTA CONNECTIONS, REFER TO RELEVANT FACILITY DRAWINGS.

SHAFT LOCATION	EXISTING GROUND LEVEL (EL)	PAD LEVEL TOP OF D'WALL (EL)	PAD HEIGHT (ABOVE GL) (FT)	DEPTH OF GROUND IMPROVEMENT (FT) *	PAD SITE WIDTH (FT)	PAD SITE LENGTH (FT)	FINISHED ELEVATION (FT)
	G	X	H1	H2	W	L	EL
TWIN CITIES (2)	10	21	11	0	300	500	35.00
NEW HOPE TRACT SHAFT	1	18	17	40	200	235	35.00
STATEN ISLAND SHAFT	-10	14	24	15	200	235	35.50
BOULDIN ISLAND SHAFT	-19	13	32	45	320	420	34.00
MANDEVILLE ISLAND SHAFT	-15	13	28	15	200	235	32.00
BACON ISLAND SHAFT	-14	13	27	20	250	300	30.30
BYRON TRACT WORKING SHAFT	-9	13	22	50	320	420	30.30

* NOTE - GROUND IMPROVEMENT DEPTHS ARE PRELIMINARY PENDING FUTURE GEOTECHNICAL EXPLORATION AND TESTING.

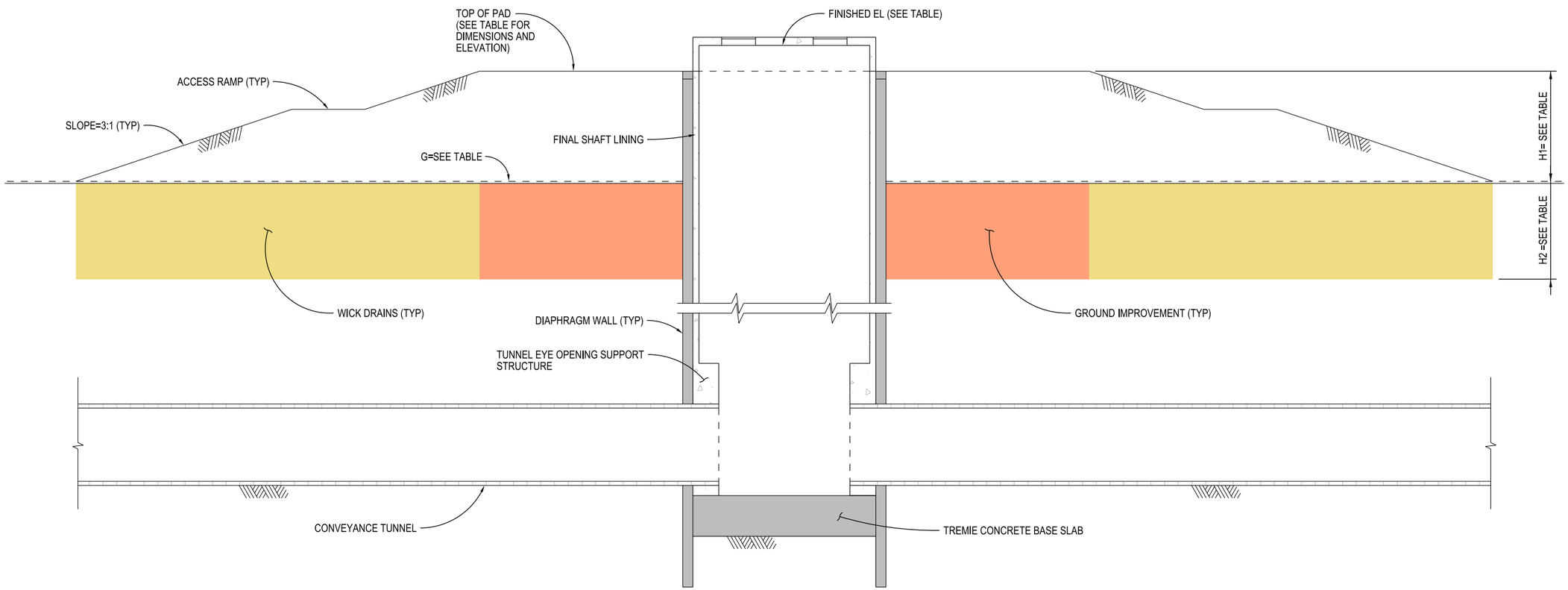

SHAFT PAD SECTION - WET EXCAVATION WITH DIAPHRAGM WALLS
(SINGLE SHAFT SECTION SHOWN)
NOT TO SCALE

TUNNELS AND SHAFTS

VERIFY SCALE
BAR IS ONE INCH ON ORIGINAL DRAWING.
0 1"

REV	DATE	DESCRIPTION	SUB.	APPD
	12/23/2021	FINAL DRAFT BASELINE DRAWINGS		

DESIGNED: MARTIN ELLIS
DRAWN: RUSSELL TORADO
CHECKED: STEVE DUBNEWYCH
APPROVAL RECOMMENDED
APPROVAL BY

DCA DELTA CONVEYANCE DESIGN & CONSTRUCTION AUTHORITY

ENGINEERING PROJECT REPORT
DELTA CONVEYANCE PROJECT
SINGLE TUNNEL - CENTRAL CORRIDOR

SHAFT PAD SECTION
WET EXCAVATION WITH D-WALL

PROJECT NO. W8X97000
SHEET NO. STC-S-5160TN
REV
SEQUENCE NO.

STC-S-5160TN_W8X97000.dgn

PLOT DATE:11/11/2021 PLOT TIME:2:25:51 PM

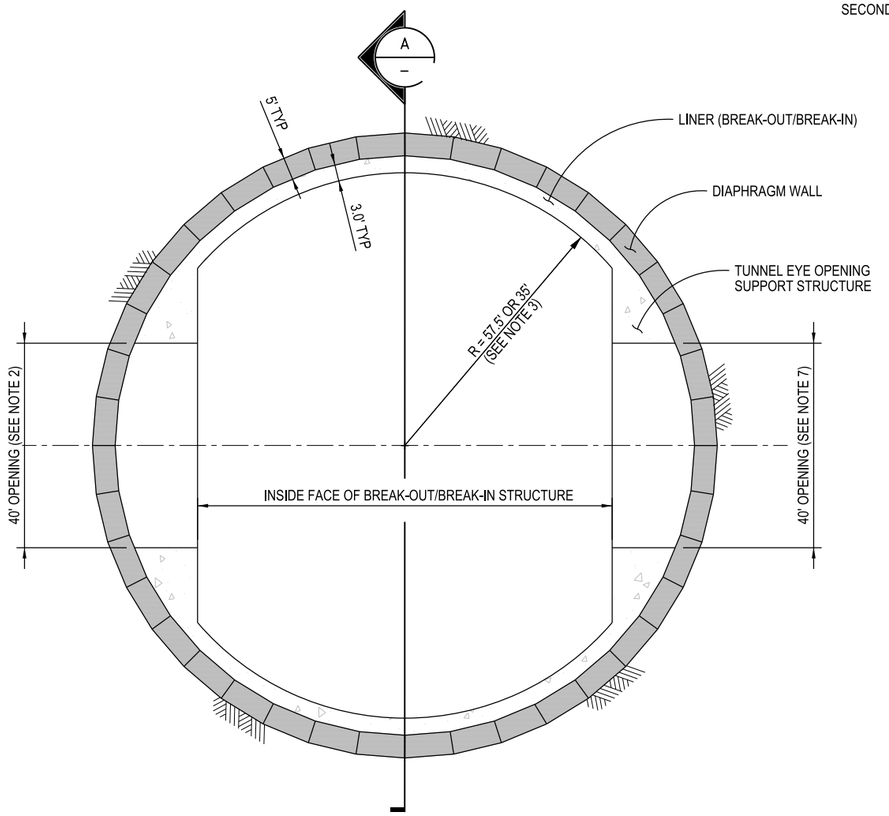

1 SHAFT PLAN
NOT TO SCALE

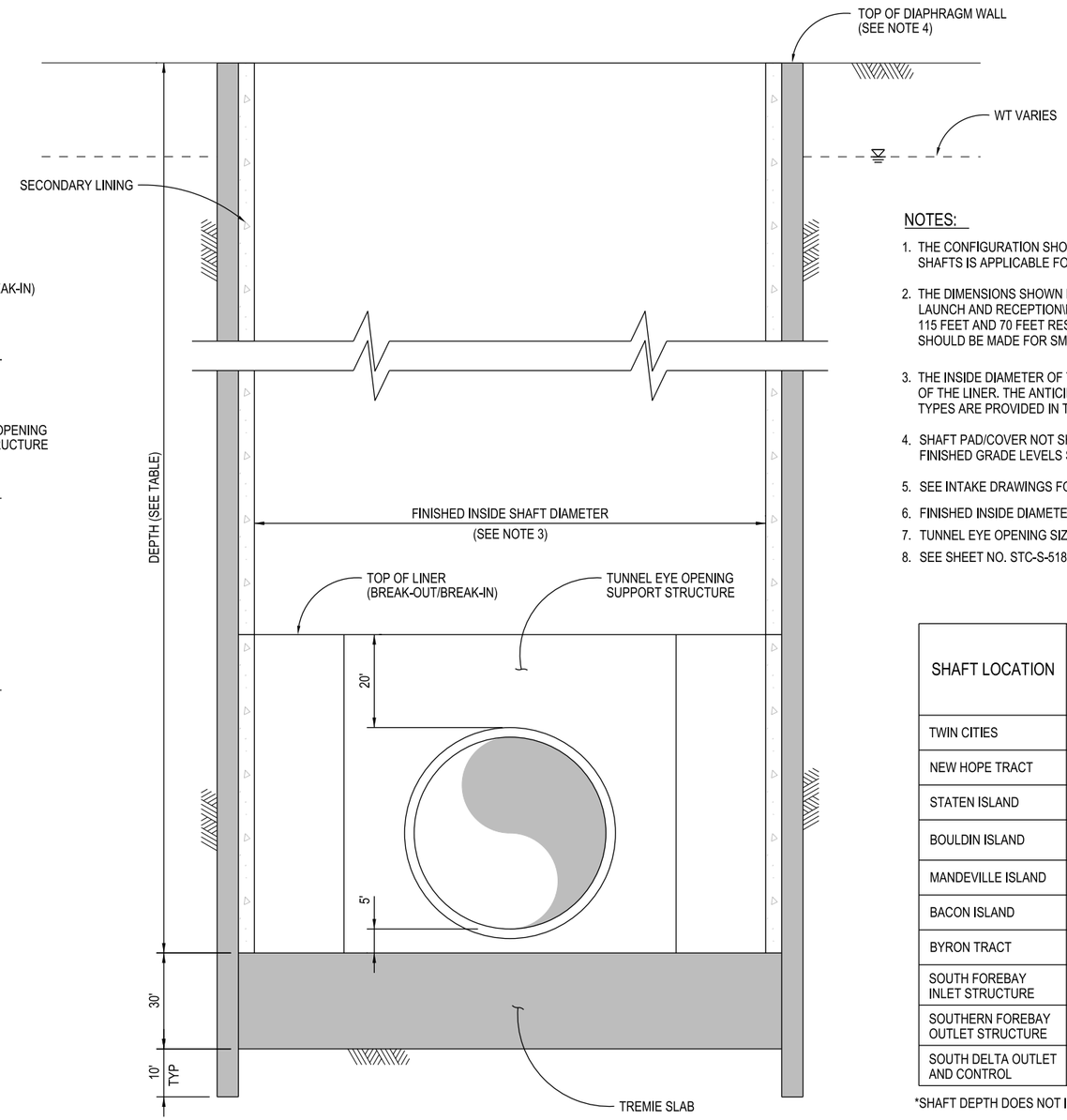

A SECTION
NOT TO SCALE

NOTES:

1. THE CONFIGURATION SHOWN HEREON FOR THE LAUNCH AND RECEPTION SHAFTS IS APPLICABLE FOR THE MAIN TUNNELS.
2. THE DIMENSIONS SHOWN HEREON ARE APPLICABLE FOR THE SINGLE DRIVE LAUNCH AND RECEPTION\MAINTENANCE SHAFTS WITH AN INSIDE DIAMETER OF 115 FEET AND 70 FEET RESPECTIVELY. ADJUSTMENTS TO THESE DIMENSIONS SHOULD BE MADE FOR SMALLER INSIDE DIAMETERS.
3. THE INSIDE DIAMETER OF THE SHAFTS IS MEASURED FROM THE INSIDE FACE OF THE LINER. THE ANTICIPATED INSIDE DIAMETERS OF THE VARIOUS SHAFT TYPES ARE PROVIDED IN TABLE.
4. SHAFT PAD/COVER NOT SHOWN FOR CLARITY, FINISHED GRADE LEVELS SHOWN ON DRAWING STC-S-5160TN.
5. SEE INTAKE DRAWINGS FOR SHAFT DETAILS AT INTAKES 2, 3 AND 5.
6. FINISHED INSIDE DIAMETERS SHOWN BASED ON 6,000 CFS OPTION.
7. TUNNEL EYE OPENING SIZE WOULD MATCH EXTERNAL SIZE OF TBM.
8. SEE SHEET NO. STC-S-5180TN FOR DOUBLE SHAFT DIMENSIONS.

SHAFT LOCATION	SHAFT TYPE	FINISHED INSIDE DIA. (FEET)	DEPTH* (FEET)
TWIN CITIES	DOUBLE LAUNCH	SEE NOTE 8	SEE NOTE 8
NEW HOPE TRACT	MAINTENANCE	70	171
STATEN ISLAND	MAINTENANCE	70	170
BOULDIN ISLAND	LAUNCH AND RECEIVING	115	172
MANDEVILLE ISLAND	MAINTENANCE	70	174
BACON ISLAND	RECEIVING	70	177
BYRON TRACT	WORKING	115	180
SOUTH FOREBAY INLET STRUCTURE	LAUNCH	115	196
SOUTHERN FOREBAY OUTLET STRUCTURE	LAUNCH x 2 ea	115	153
SOUTH DELTA OUTLET AND CONTROL	RECEIVING x 2 ea	90	156

*SHAFT DEPTH DOES NOT INCLUDE COLLAR HEIGHT ABOVE CONSTRUCTION PAD.

TUNNELS AND SHAFTS

VERIFY SCALE
BAR IS ONE INCH ON ORIGINAL DRAWING.
0 1"

REV	DATE	DESCRIPTION	SUB.	APPD
	12/23/2021	FINAL DRAFT BASELINE DRAWINGS		

DESIGNED: MARTIN ELLIS
DRAWN: RUSSELL TORADO
CHECKED: STEVE DUBNEWYCH
APPROVAL RECOMMENDED
APPROVAL BY

DELTA CONVEYANCE DESIGN & CONSTRUCTION AUTHORITY

ENGINEERING PROJECT REPORT
DELTA CONVEYANCE PROJECT
SINGLE TUNNEL - CENTRAL CORRIDOR

SINGLE LAUNCH, RECEPTION, WORKING AND MAINTENANCE SHAFTS - PLAN AND SECTION

PROJECT NO. W8X97000
SHEET NO. STC-S-5170TN
REV | SEQUENCE NO.

STC-S-5170TN_W8X97000.dgn

PLOT DATE:11/11/2021 PLOT TIME:2:24:41 PM

NOTES:

1. THE FINISHED INSIDE DIAMETER OF THE SHAFTS IS MEASURED FROM THE INSIDE FACE OF THE LINER.
2. SHAFT PAD/COVER NOT SHOWN FOR CLARITY, FINISHED GRADE LEVELS SHOWN ON DRAWING STC-S-5160TN.
3. SEE INTAKE DRAWINGS FOR SHAFT DETAILS AT INTAKES 2, 3 AND 5.
4. TUNNEL EYE OPENING SIZE WOULD MATCH EXTERNAL SIZE OF TBM.

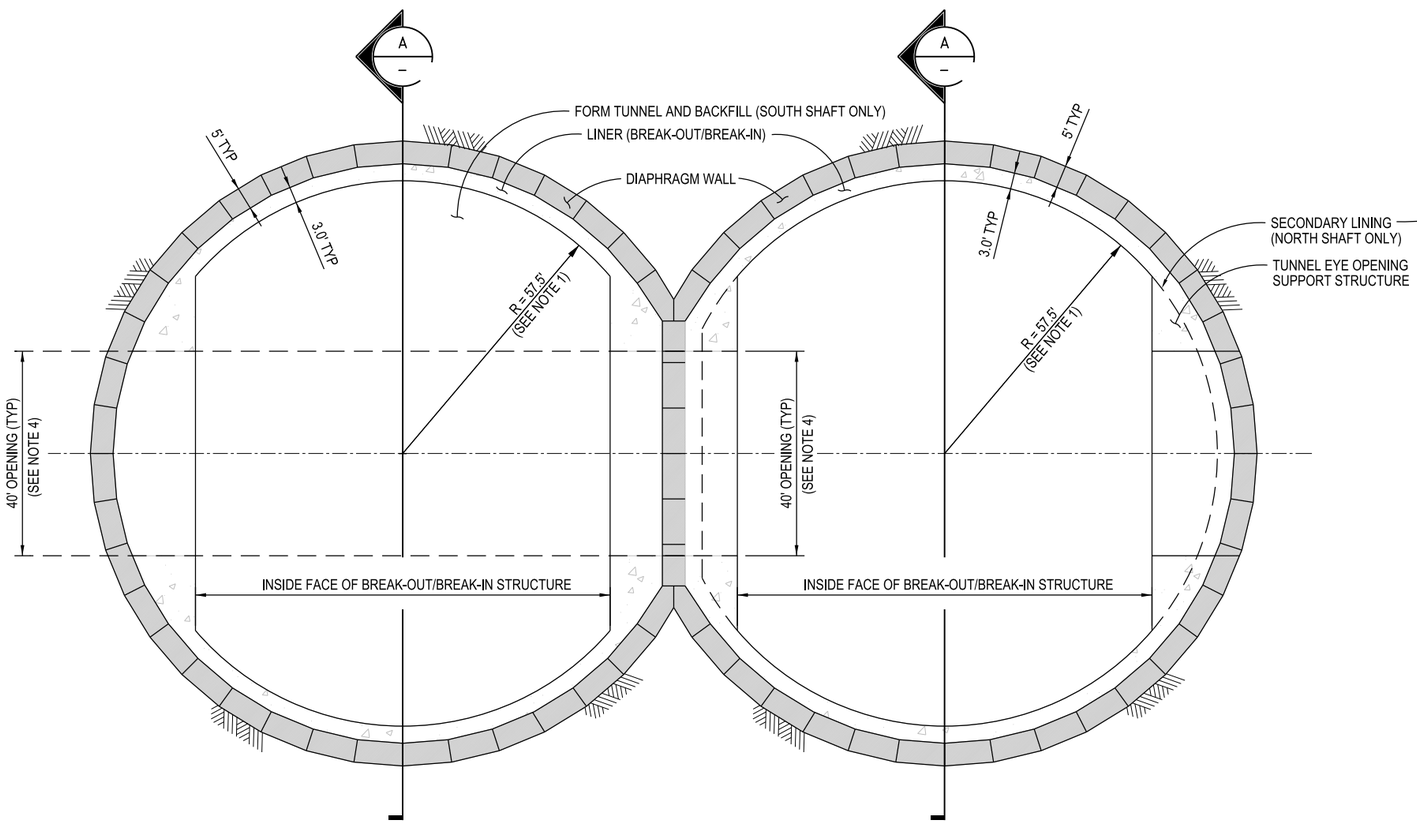

1 DOUBLE SHAFT PLAN
NOT TO SCALE

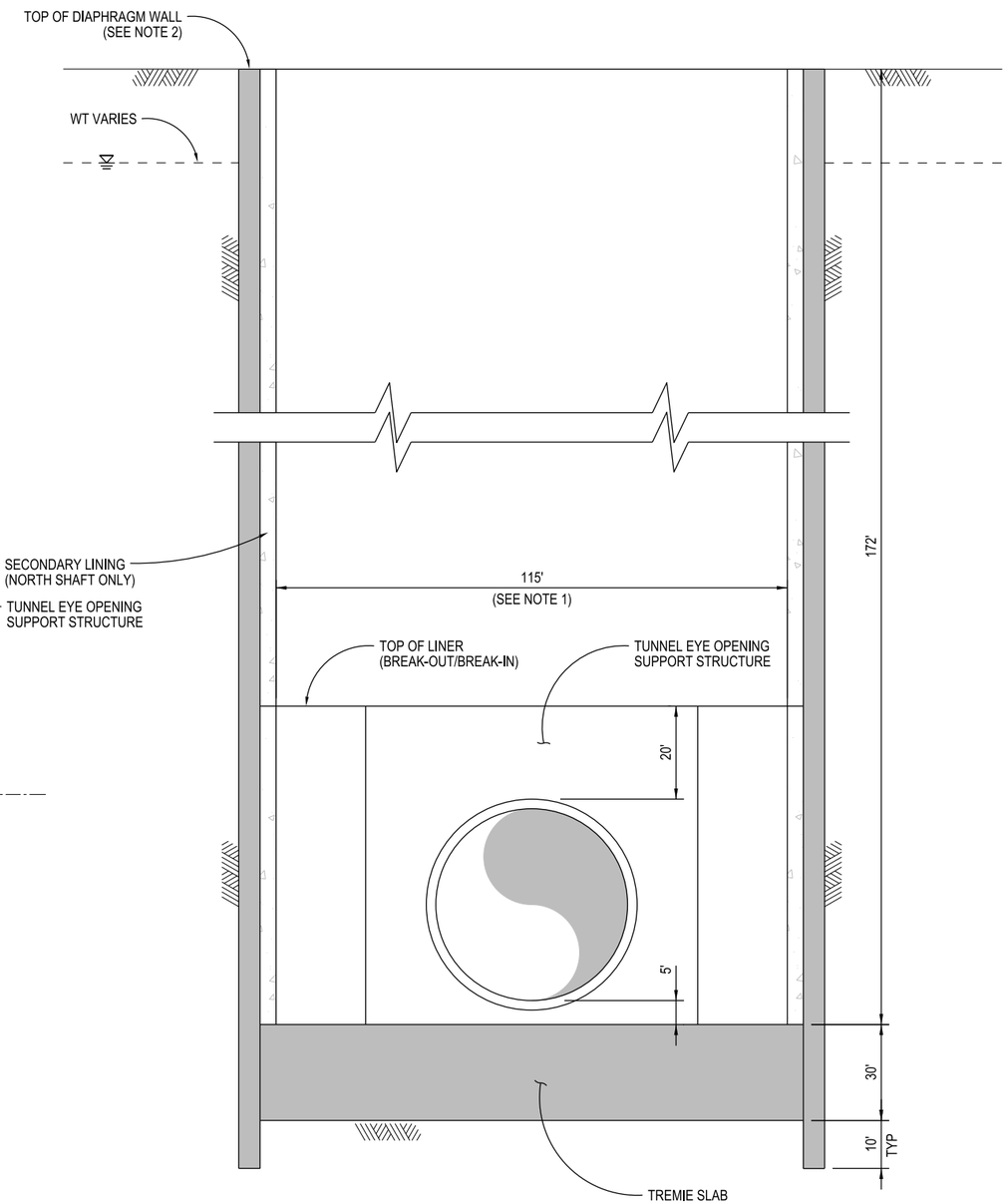

A SECTION
NOT TO SCALE

TUNNELS AND SHAFTS

VERIFY SCALE
BAR IS ONE INCH ON ORIGINAL DRAWING.
0 1"

REV	DATE	DESCRIPTION	SUB.	APPD
	12/23/2021	FINAL DRAFT BASELINE DRAWINGS		

DESIGNED: MARTIN ELLIS
DRAWN: RUSSELL TORADO
CHECKED: STEVE DUBNEWYCH
APPROVAL RECOMMENDED
APPROVAL BY

DELTA CONVEYANCE DESIGN & CONSTRUCTION AUTHORITY

ENGINEERING PROJECT REPORT
DELTA CONVEYANCE PROJECT
SINGLE TUNNEL - CENTRAL CORRIDOR

TWIN CITIES DOUBLE LAUNCH SHAFT
PLAN AND SECTION

PROJECT NO. W8X97000
SHEET NO. STC-S-5180TN
REV
SEQUENCE NO.

STC-S-5180TN_W8X97000.dgn

PLOT DATE:11/12/2021 PLOT TIME:2:01:57 PM

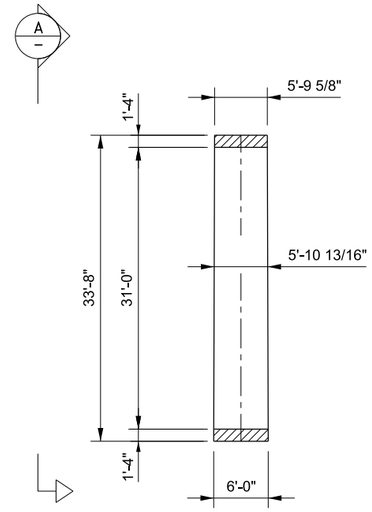

NOTES:

1. TAPER +/- 2.38" CORRESPONDING TO A MINIMUM CURVATURE RADIUS OF 1000 FEET.

B SECTION

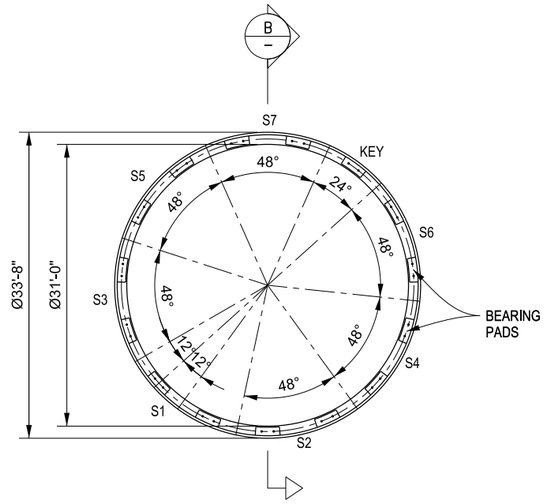

VIEW FROM TUNNEL FACE TOWARDS TUNNEL

A ELEVATION

1 31' DIA. MAIN TUNNEL LINING DETAIL PROJECT CAPACITY FOR 4,500 CFS OPTION

NOT TO SCALE

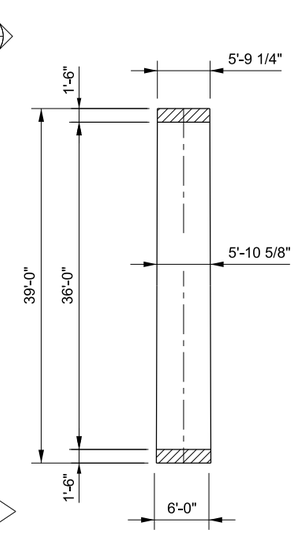

NOTES:

1. TAPER +/- 2.75" CORRESPONDING TO A MINIMUM CURVATURE RADIUS OF 1000 FEET.

D SECTION

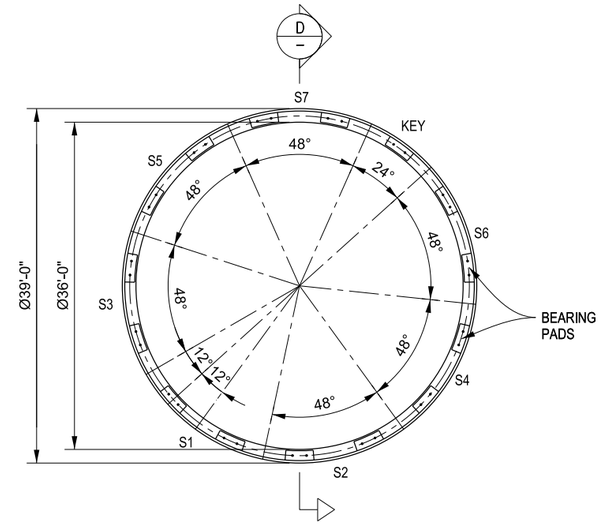

VIEW FROM TUNNEL FACE TOWARDS TUNNEL

C ELEVATION

2 36' DIA. MAIN TUNNEL LINING DETAIL PROJECT CAPACITY FOR 6,000 CFS OPTION

NOT TO SCALE

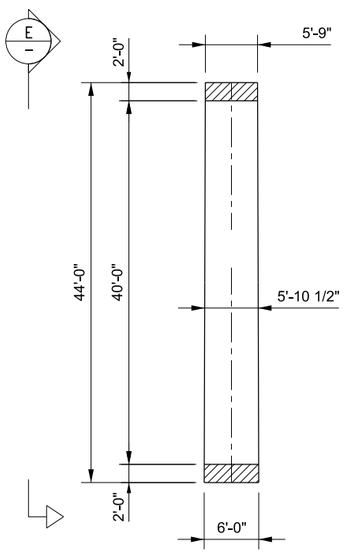

NOTES:

1. TAPER +/- 3" CORRESPONDING TO A MINIMUM CURVATURE RADIUS OF 1000 FEET.

F SECTION

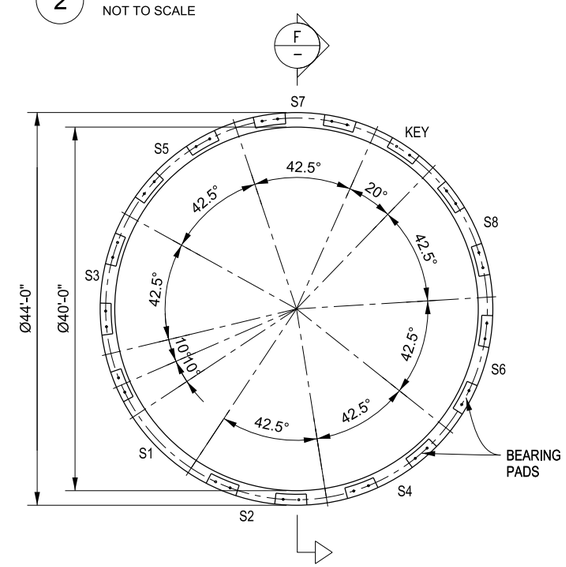

VIEW FROM TUNNEL FACE TOWARDS TUNNEL

E ELEVATION

3 40' DIA. MAIN TUNNEL AND DUAL SOUTH TUNNEL (7,500 CFS OPTION) LINING DETAIL

NOT TO SCALE

TUNNELS AND SHAFTS

VERIFY SCALE
BAR IS ONE INCH ON ORIGINAL DRAWING.
0 1"

REV	DATE	DESCRIPTION	SUB.	APPD
	12/23/2021	FINAL DRAFT BASELINE DRAWINGS		

DESIGNED: MARTIN ELLIS
DRAWN: JUNE KASHIWADA
CHECKED: STEVE DUBNEWYCH
APPROVAL RECOMMENDED
APPROVAL BY

DELTA CONVEYANCE DESIGN & CONSTRUCTION AUTHORITY

ENGINEERING PROJECT REPORT
DELTA CONVEYANCE PROJECT
SINGLE TUNNEL - CENTRAL CORRIDOR

MAIN TUNNELS SEGMENT LINING OPTIONS

PROJECT NO. W8X97000
SHEET NO. STC-S-5190TN
REV
SEQUENCE NO.

STC-S-5190TN_W8X97000.dgn

PLOT DATE:11/11/2021 PLOT TIME:2:26:55 PM

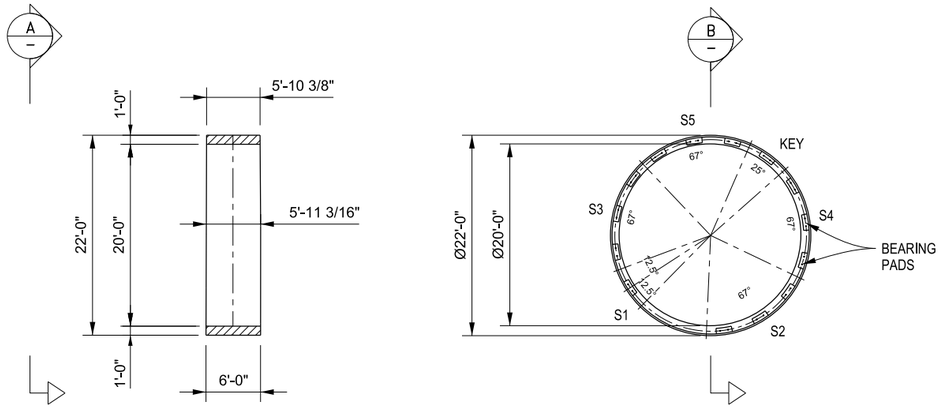

NOTES:

1. TAPER +/- 1 5/8" CORRESPONDING TO A MINIMUM CURVATURE RADIUS OF 1000 FEET.

B SECTION

VIEW FROM TUNNEL FACE TOWARDS TUNNEL

A ELEVATION

1 SINGLE 20' DIA. TUNNEL LINING DETAIL PROJECT CAPACITY FOR 1,500 CFS TO JONES OUTLET STRUCTURE

NOT TO SCALE

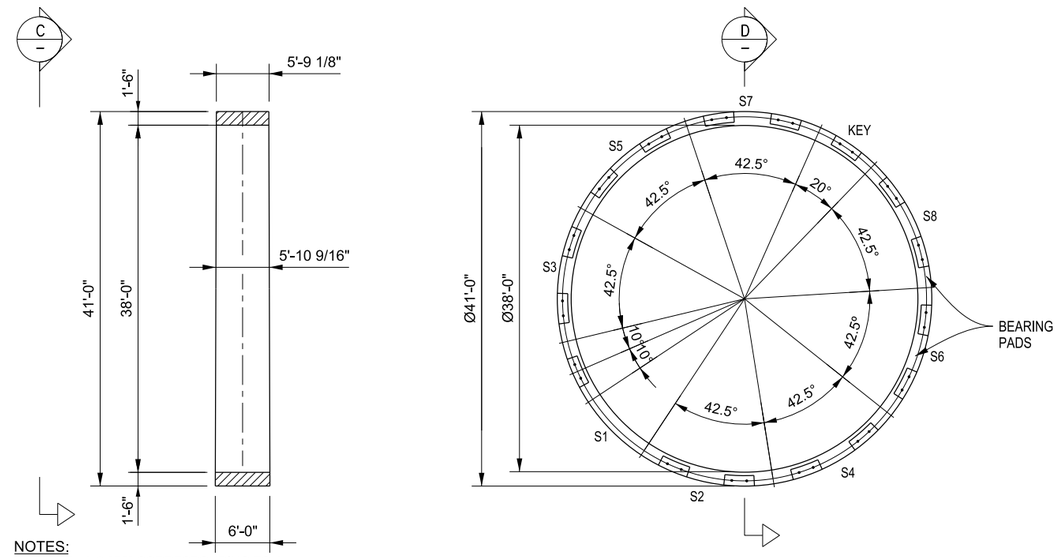

NOTES:

1. TAPER +/- 2.875" CORRESPONDING TO A MINIMUM CURVATURE RADIUS OF 1000 FEET.

D SECTION

VIEW FROM TUNNEL FACE TOWARDS TUNNEL

C ELEVATION

2 38' DIA. DUAL SOUTH TUNNEL LINING DETAIL PROJECT CAPACITY FOR 6,000 CFS OPTION

NOT TO SCALE

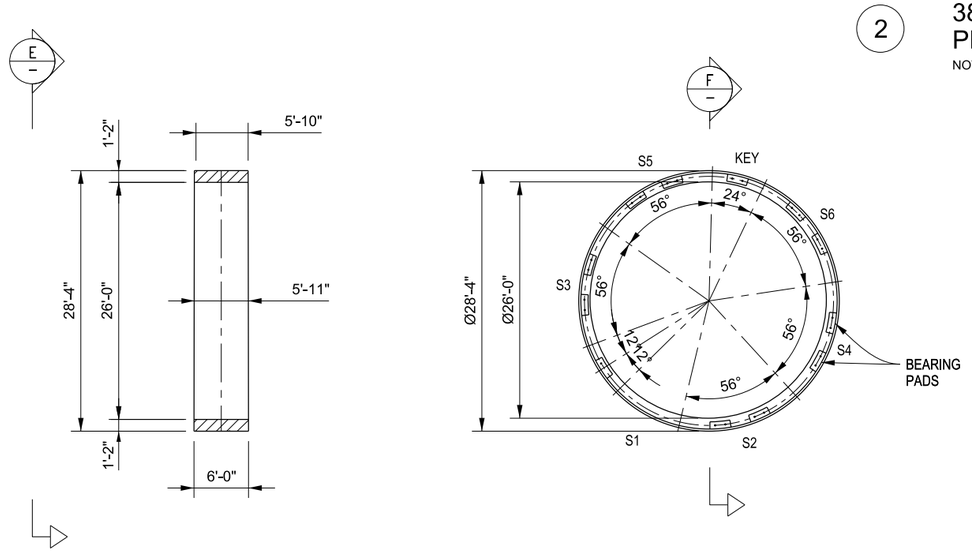

NOTES:

1. TAPER +/- 2.0" CORRESPONDING TO A MINIMUM CURVATURE RADIUS OF 1000 FEET.

F SECTION

VIEW FROM TUNNEL FACE TOWARDS TUNNEL

E ELEVATION

3 26' DIA. MAIN TUNNEL LINING DETAIL PROJECT CAPACITY FOR 3.000 CFS OPTION

NOT TO SCALE

TUNNELS AND SHAFTS

VERIFY SCALE
BAR IS ONE INCH ON ORIGINAL DRAWING.
0 1"

REV	DATE	DESCRIPTION	SUB.	APPD
	12/23/2021	FINAL DRAFT BASELINE DRAWINGS		

DESIGNED: MARTIN ELLIS
DRAWN: RUSSELL TORADO
CHECKED: STEVE DUBNEWYCH
APPROVAL RECOMMENDED
APPROVAL BY

DELTA CONVEYANCE DESIGN & CONSTRUCTION AUTHORITY

ENGINEERING PROJECT REPORT
DELTA CONVEYANCE PROJECT
SINGLE TUNNEL - CENTRAL CORRIDOR

SOUTH TUNNELS SEGMENT LINING OPTIONS

PROJECT NO. W8X97000
SHEET NO. STC-S-5200TN
REV
SEQUENCE NO.

STC-S-5200TN_W8X97000.dgn

PLOT DATE:11/11/2021 PLOT TIME:2:25:49 PM

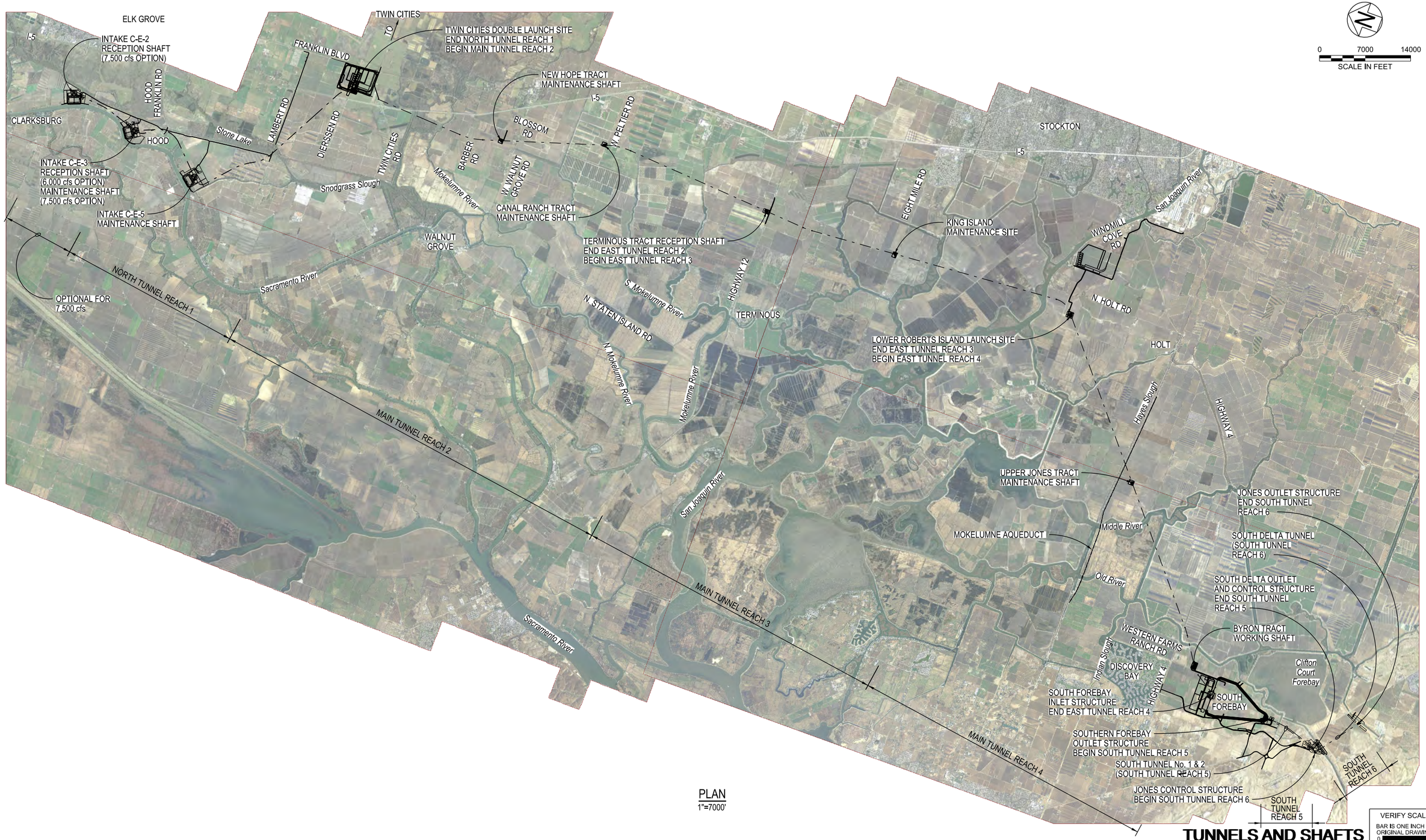

PLAN
1"=7000'

TUNNELS AND SHAFTS

VERIFY SCALE
BAR IS ONE INCH ON ORIGINAL DRAWING.
0 1"

REV	DATE	DESCRIPTION	SUB.	APPD
	12/23/2021	FINAL DRAFT BASELINE DRAWINGS		

DESIGNED: MARTIN ELLIS
DRAWN: RUSSELL TORADO
CHECKED: STEVE DUBNEWYCH
APPROVAL RECOMMENDED
APPROVAL BY

DCA
DELTA CONVEYANCE DESIGN & CONSTRUCTION AUTHORITY

ENGINEERING PROJECT REPORT
DELTA CONVEYANCE PROJECT
SINGLE TUNNEL - EASTERN CORRIDOR

OVERALL SITE MAP

PROJECT NO. W8X97000
SHEET NO. STE-G-0010TN
REV
SEQUENCE NO.

STE-G-0010TN_W8X97000.dgn

PLOT DATE:12/13/2021 PLOT TIME:11:04:32 AM

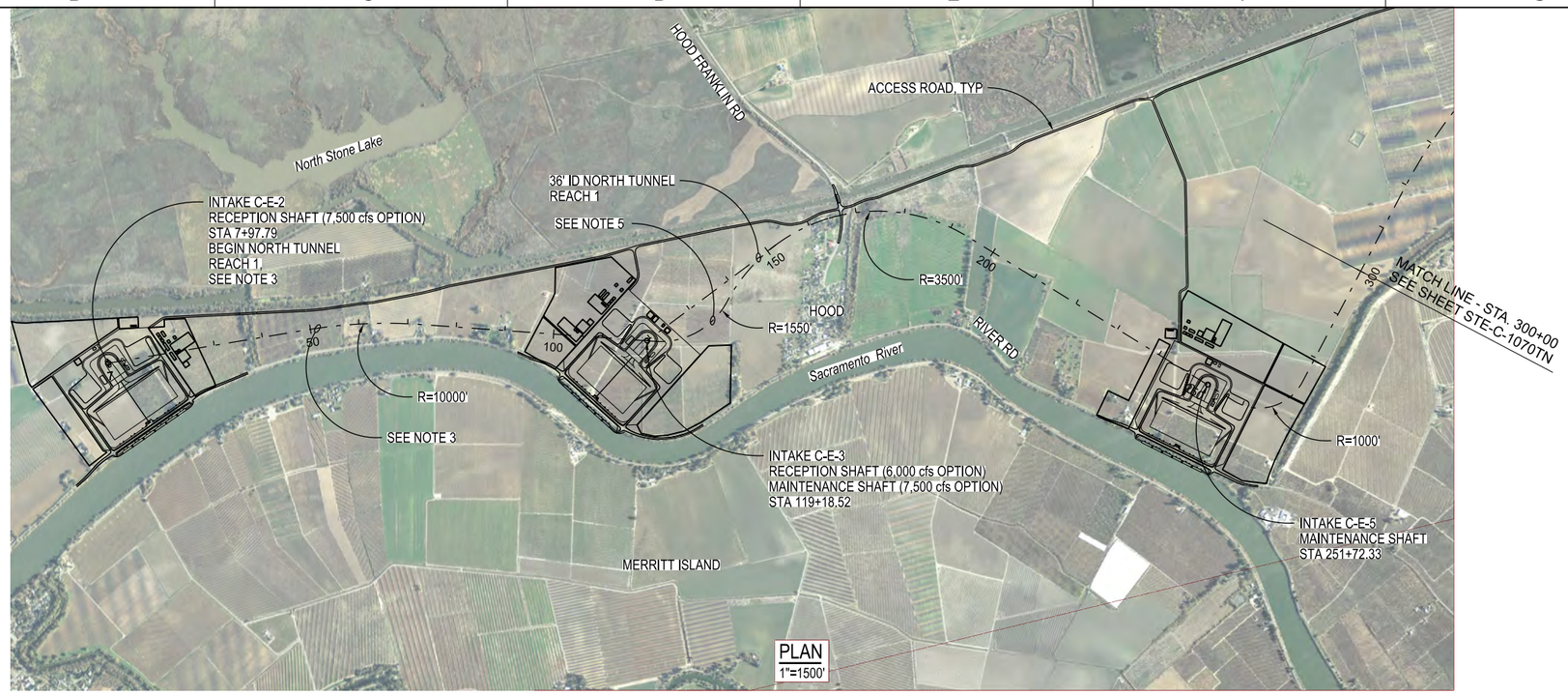

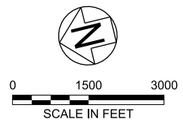

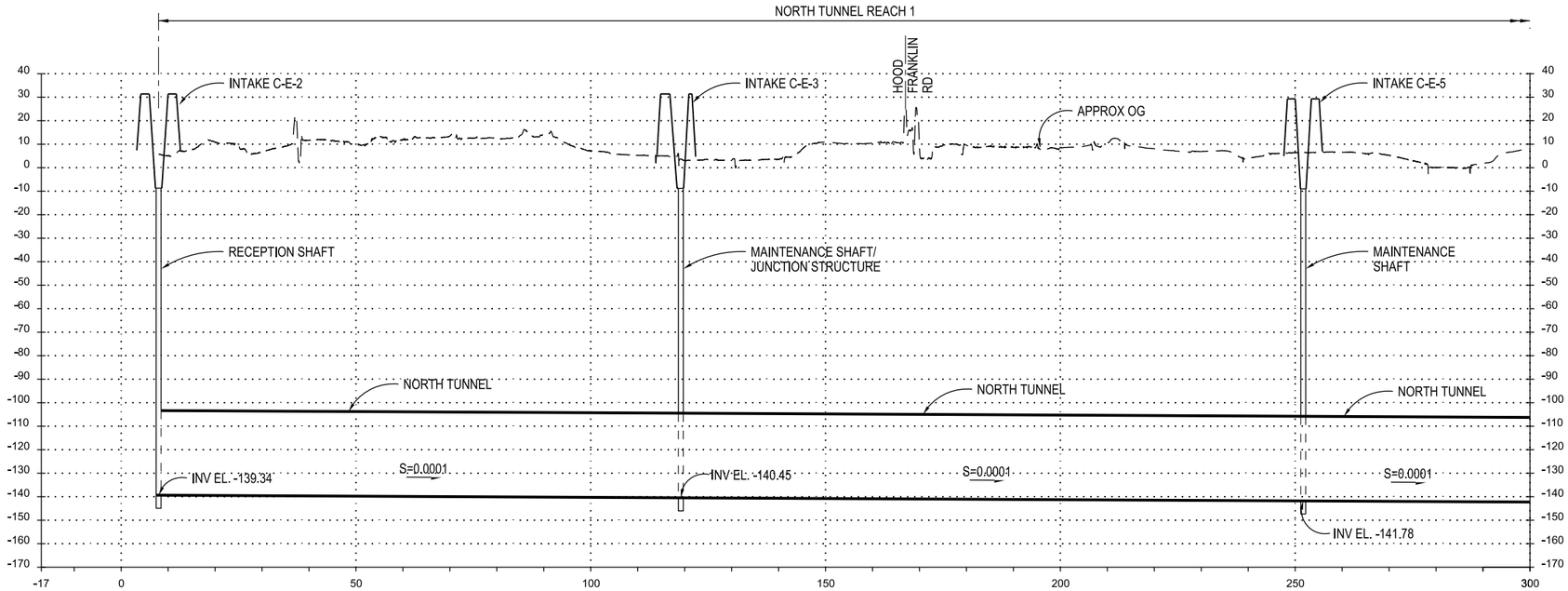

PROFILE
VERTICAL EXAGGERATION = x50

NOTES:

1. ALT 36' ID TUNNEL SHOWN FOR 6,000 cfs.
2. TOPOGRAPHY DATA IS BASED ON USGS NATIONAL ELEVATION DATASET (NED). DATA IS FOR CONCEPTUAL USE ONLY.
3. INTAKE C-E-2 AND TUNNEL BETWEEN STA 13+00.64 AND 124+13.90 SHOWN ONLY FOR 7,500 cfs OPTION.
4. SEE SHAFT SITE PLANS FOR DISTURBANCE LIMITS.
5. CURVED SECTION TO BE USED FOR 7,500 CFS OPTION ONLY, LENGTH NOT REFLECTED IN PROFILE BELOW.

TUNNELS AND SHAFTS

VERIFY SCALE
BAR IS ONE INCH ON ORIGINAL DRAWING.
0 1"

REV	DATE	DESCRIPTION	SUB.	APPD
	12/23/2021	FINAL DRAFT BASELINE DRAWINGS		

DESIGNED: MARTIN ELLIS
DRAWN: RUSSELL TORADO
CHECKED: STEVE DUBNEWYCH
APPROVAL RECOMMENDED
APPROVAL BY

DELTA CONVEYANCE DESIGN & CONSTRUCTION AUTHORITY

ENGINEERING PROJECT REPORT
DELTA CONVEYANCE PROJECT
SINGLE TUNNEL - EASTERN CORRIDOR

NORTH TUNNEL
PLAN AND PROFILE - SHEET 1 OF 2

PROJECT NO. W8X97000
SHEET NO. STE-C-1060TN
REV
SEQUENCE NO.

STE-C-1060TN_W8X97000.dgn

PLOT DATE:12/13/2021 PLOT TIME:10:34:40 AM

PLAN
1"=1500'

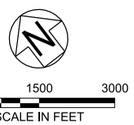

NOTES:

1. ALT 36' ID TUNNEL SHOWN FOR 6,000 cfs.
2. TOPOGRAPHY DATA IS BASED ON USGS NATIONAL ELEVATION DATASET (NED). DATA IS FOR CONCEPTUAL USE ONLY.
3. SEE SHAFT SITE PLANS FOR DISTURBANCE LIMITS.

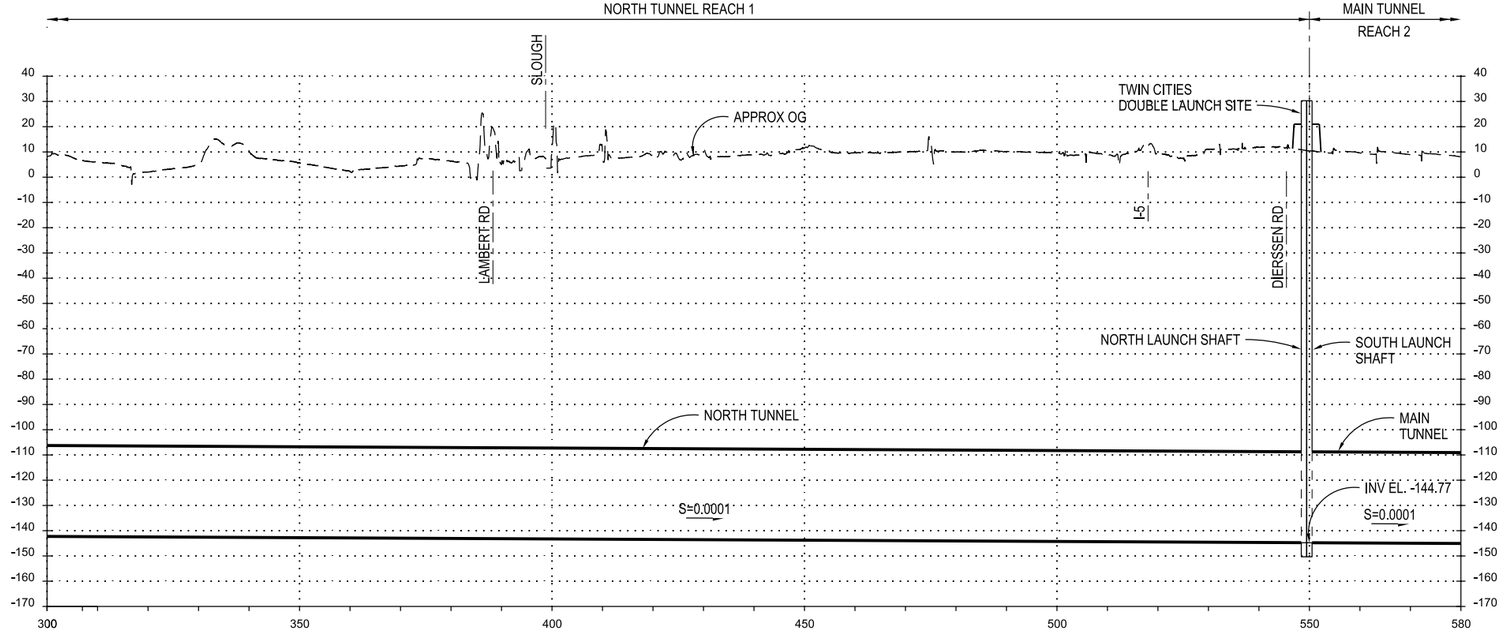

PROFILE
VERTICAL EXAGGERATION = x50

TUNNELS AND SHAFTS

VERIFY SCALE
BAR IS ONE INCH ON ORIGINAL DRAWING.
0 1"

REV	DATE	DESCRIPTION	SUB.	APPD
	12/23/2021	FINAL DRAFT BASELINE DRAWINGS		

DESIGNED: MARTIN ELLIS
DRAWN: RUSSELL TORADO
CHECKED: STEVE DUBNEWYCH
APPROVAL RECOMMENDED
APPROVAL BY

DELTA CONVEYANCE DESIGN & CONSTRUCTION AUTHORITY

ENGINEERING PROJECT REPORT
DELTA CONVEYANCE PROJECT
SINGLE TUNNEL - EASTERN CORRIDOR

NORTH TUNNEL
PLAN AND PROFILE - SHEET 2 OF 2

PROJECT NO. W8X97000
SHEET NO. STE-C-1070TN
REV
SEQUENCE NO.

STE-C-1070TN_W8X97000.dgn

PLOT DATE:11/11/2021 PLOT TIME:2:50:38 PM

0 1500 3000
SCALE IN FEET

NOTES:

1. ALT 36' ID TUNNEL SHOWN FOR 6,000 cfs.
2. TOPOGRAPHY DATA IS BASED ON USGS NATIONAL ELEVATION DATASET (NED). DATA IS FOR CONCEPTUAL USE ONLY.
3. SEE SHAFT SITE PLANS FOR DISTURBANCE LIMITS.

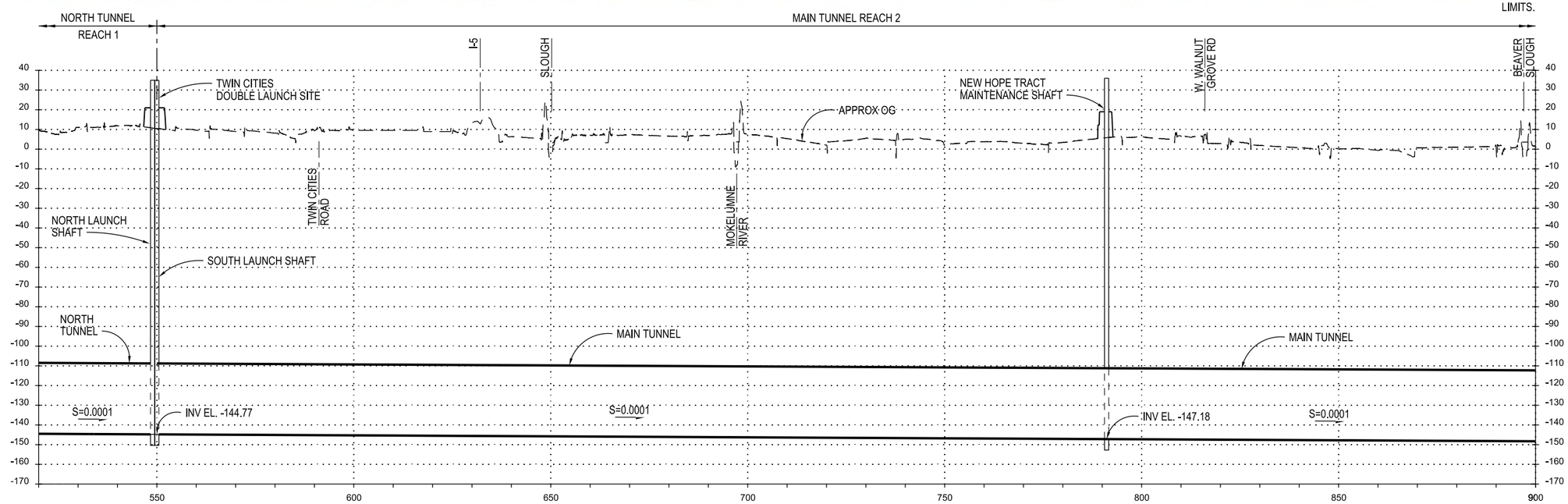

PROFILE
VERTICAL EXAGGERATION = x50

TUNNELS AND SHAFTS

VERIFY SCALE
BAR IS ONE INCH ON ORIGINAL DRAWING.
0 1"

REV	DATE	DESCRIPTION	SUB.	APPD
	12/23/2021	FINAL DRAFT BASELINE DRAWINGS		

DESIGNED: MARTIN ELLIS
DRAWN: RUSSELL TORADO
CHECKED: STEVE DUBNEWYCH
APPROVAL RECOMMENDED
APPROVAL BY

DCA
DELTA CONVEYANCE DESIGN & CONSTRUCTION AUTHORITY

ENGINEERING PROJECT REPORT
DELTA CONVEYANCE PROJECT
SINGLE TUNNEL - EASTERN CORRIDOR

MAIN TUNNEL PLAN AND PROFILE
SHEET 1 OF 5

PROJECT NO. W8X97000
SHEET NO. STE-C-1090TN
REV
SEQUENCE NO.

STE-C-1090TN_W8X97000.dgn

PLOT DATE:11/11/2021 PLOT TIME:12:19:51 PM

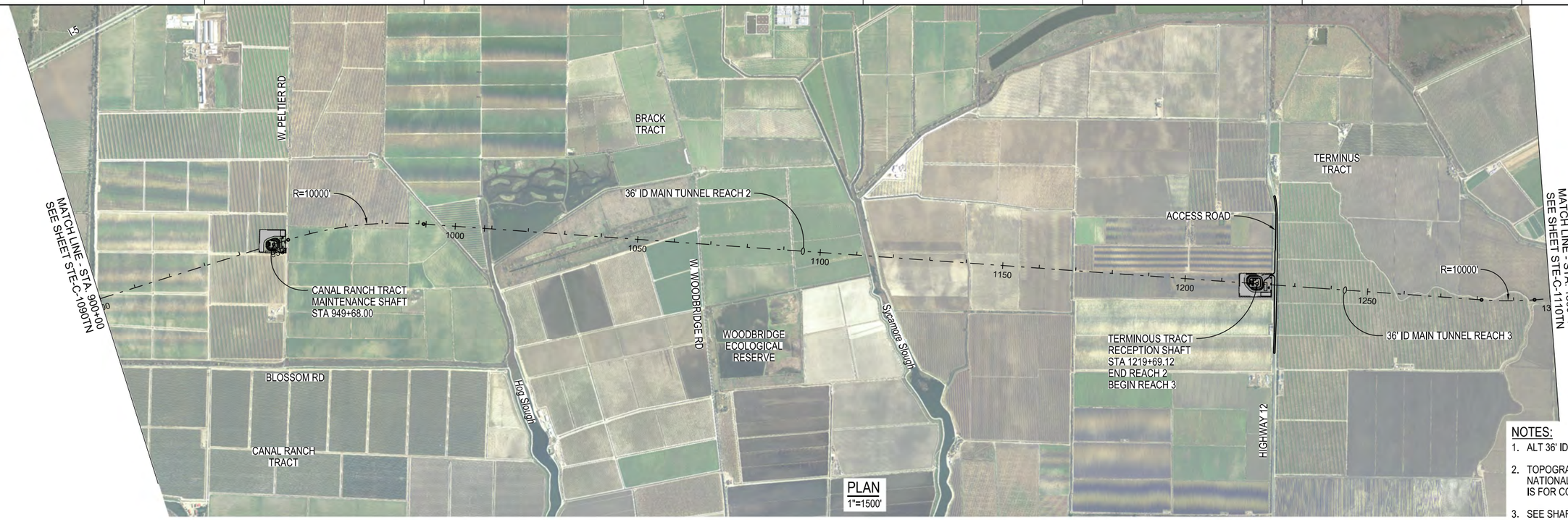

NOTES:

1. ALT 36' ID TUNNEL SHOWN FOR 6,000 cfs.
2. TOPOGRAPHY DATA IS BASED ON USGS NATIONAL ELEVATION DATASET (NED). DATA IS FOR CONCEPTUAL USE ONLY.
3. SEE SHAFT SITE PLANS FOR DISTURBANCE LIMITS.

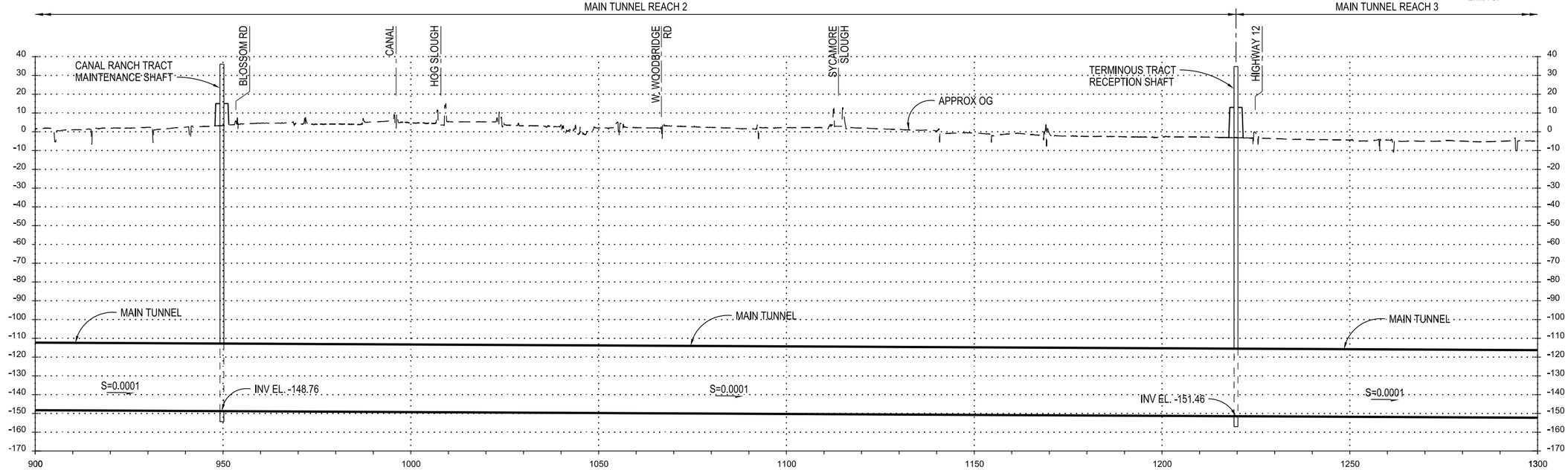

PROFILE

VERTICAL EXAGGERATION = x50

TUNNELS AND SHAFTS

VERIFY SCALE
BAR IS ONE INCH ON ORIGINAL DRAWING.
0 1"

REV	DATE	DESCRIPTION	SUB.	APPD
	12/23/2021	FINAL DRAFT BASELINE DRAWINGS		

DESIGNED: MARTIN ELLIS
DRAWN: RUSSELL TORADO
CHECKED: STEVE DUBNEWYCH
APPROVAL RECOMMENDED
APPROVAL BY

DELTA CONVEYANCE DESIGN & CONSTRUCTION AUTHORITY

ENGINEERING PROJECT REPORT
DELTA CONVEYANCE PROJECT
SINGLE TUNNEL - EASTERN CORRIDOR

MAIN TUNNEL PLAN AND PROFILE
SHEET 2 OF 5

PROJECT NO. W8X97000
SHEET NO. STE-C-1100TN
REV
SEQUENCE NO.

STE-C-1100TN_W8X97000.dgn

PLOT DATE:11/11/2021 PLOT TIME:12:18:51 PM

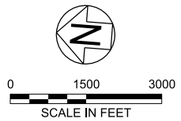

NOTES:

1. ALT 36' ID TUNNEL SHOWN FOR 6,000 cfs.
2. TOPOGRAPHY DATA IS BASED ON USGS NATIONAL ELEVATION DATASET (NED). DATA IS FOR CONCEPTUAL USE ONLY.
3. SEE SHAFT SITE PLANS FOR DISTURBANCE LIMITS.

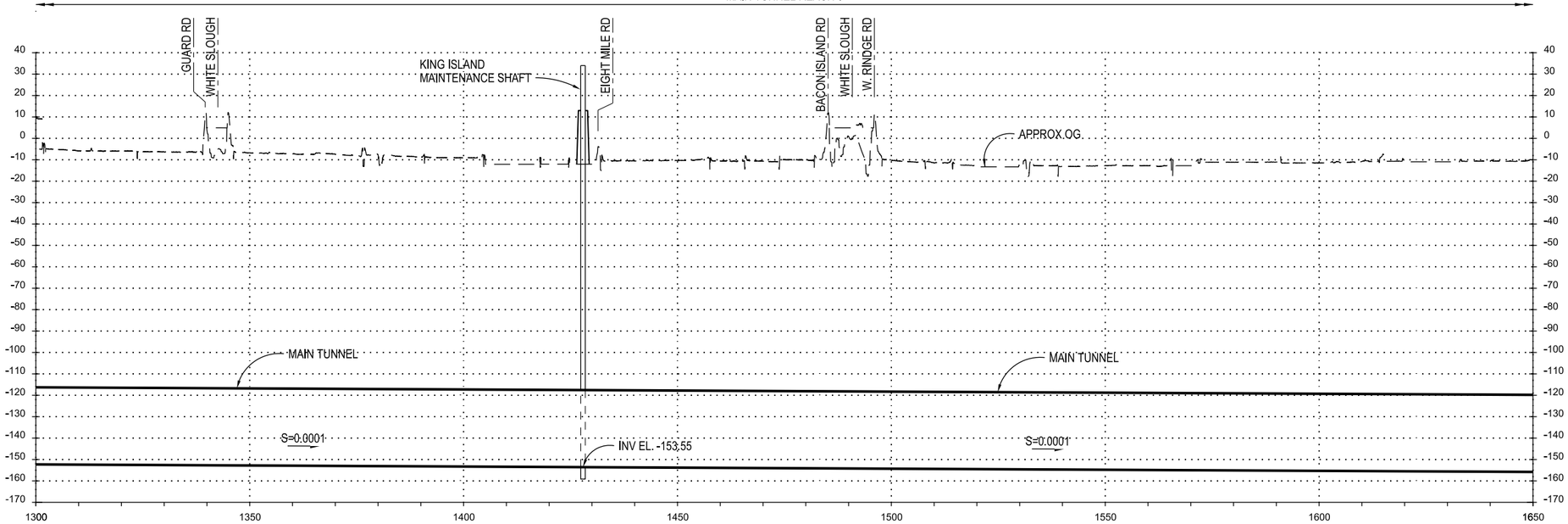

PROFILE

VERTICAL EXAGGERATION = x50

TUNNELS AND SHAFTS

VERIFY SCALE
BAR IS ONE INCH ON ORIGINAL DRAWING.
0 1"

REV	DATE	DESCRIPTION	SUB.	APPD
	12/23/2021	FINAL DRAFT BASELINE DRAWINGS		

DESIGNED: MARTIN ELLIS
DRAWN: RUSSELL TORADO
CHECKED: JOHN CAULFIELD
APPROVAL RECOMMENDED
APPROVAL BY

DELTA CONVEYANCE DESIGN & CONSTRUCTION AUTHORITY

ENGINEERING PROJECT REPORT
DELTA CONVEYANCE PROJECT
SINGLE TUNNEL - EASTERN CORRIDOR

MAIN TUNNEL PLAN AND PROFILE
SHEET 3 OF 5

PROJECT NO. W8X97000
SHEET NO. STE-C-1110TN
REV
SEQUENCE NO.

STE-C-1110TN_W8X97000.dgn

PLOT DATE:11/11/2021 PLOT TIME:12:21:19 PM

NOTES:

1. ALT 36' ID TUNNEL SHOWN FOR 6,000 cfs.
2. TOPOGRAPHY DATA IS BASED ON USGS NATIONAL ELEVATION DATASET (NED). DATA IS FOR CONCEPTUAL USE ONLY.
3. SEE SHAFT SITE PLANS FOR DISTURBANCE LIMITS.
4. BATHYMETRY DATA FROM STA:1664+52 TO STA:1669+42 WAS PROVIDED BY THE CALIFORNIA DEPARTMENT OF WATER RESOURCES

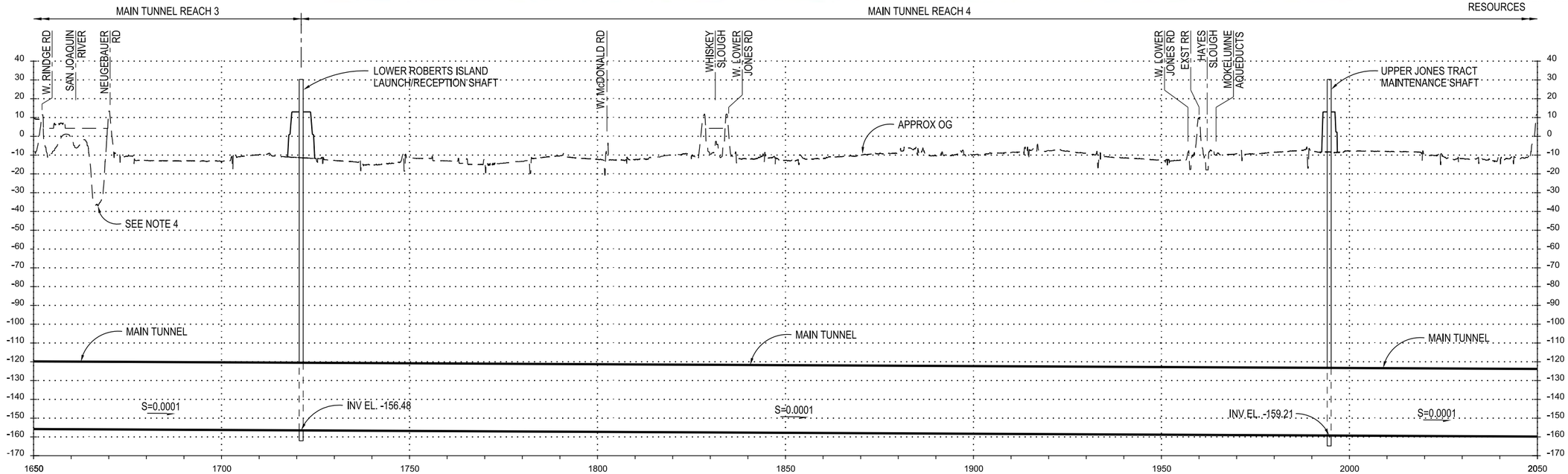

PROFILE

VERTICAL EXAGGERATION = x50

TUNNELS AND SHAFTS

VERIFY SCALE
BAR IS ONE INCH ON ORIGINAL DRAWING.
0 1"

REV	DATE	DESCRIPTION	SUB.	APPD
	12/23/2021	FINAL DRAFT BASELINE DRAWINGS		

DESIGNED: MARTIN ELLIS
DRAWN: RUSSELL TORADO
CHECKED: JOHN CAULFIELD
APPROVAL RECOMMENDED
APPROVAL BY

DELTA CONVEYANCE DESIGN & CONSTRUCTION AUTHORITY

ENGINEERING PROJECT REPORT
DELTA CONVEYANCE PROJECT
SINGLE TUNNEL - EASTERN CORRIDOR

MAIN TUNNEL PLAN AND PROFILE
SHEET 4 OF 5

PROJECT NO. W8X97000
SHEET NO. STE-C-1120TN
REV
SEQUENCE NO.

STE-C-1120TN_W8X97000.dgn

PLOT DATE:11/11/2021 PLOT TIME:2:50:03 PM

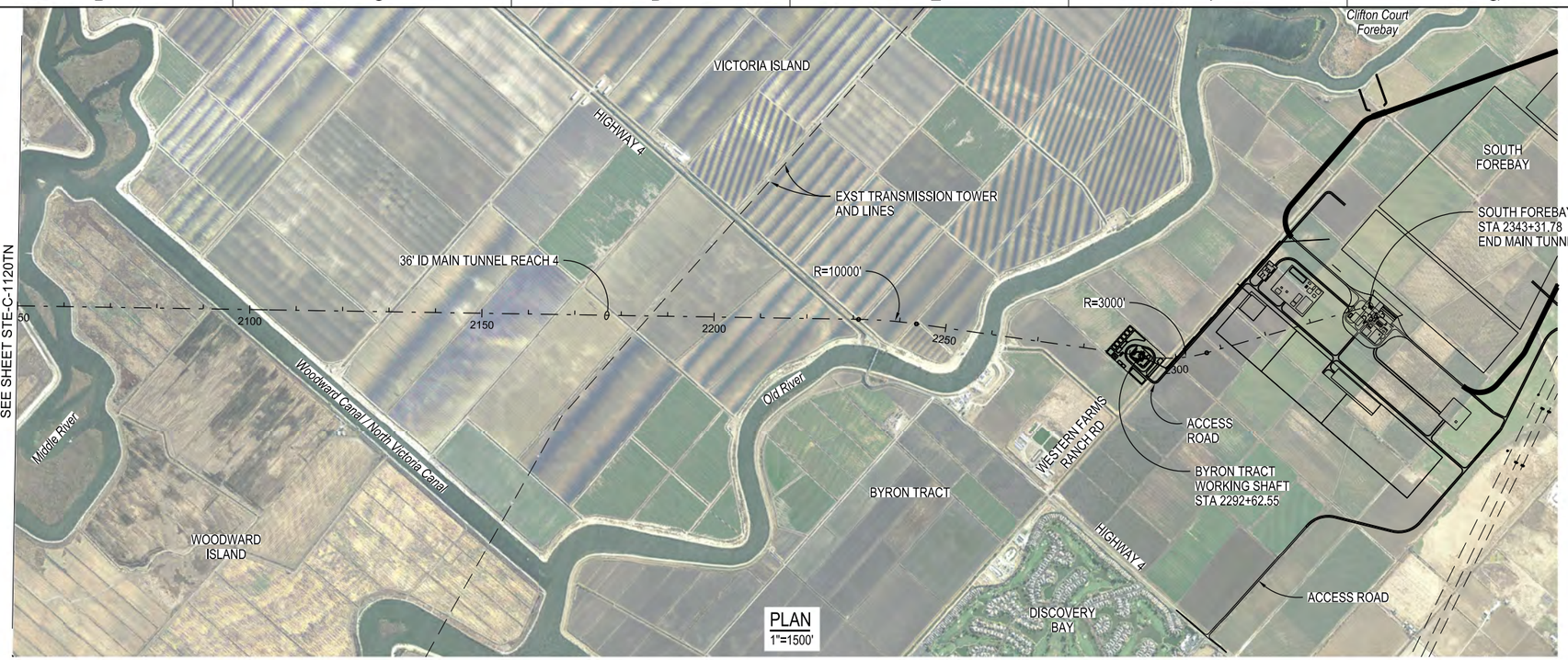

0 1500 3000
SCALE IN FEET

NOTES:

1. ALT 36' ID TUNNEL SHOWN FOR 6,000 cfs.
2. TOPOGRAPHY DATA IS BASED ON USGS NATIONAL ELEVATION DATASET (NED). DATA IS FOR CONCEPTUAL USE ONLY.
3. SEE SHAFT SITE PLANS FOR DISTURBANCE LIMITS.

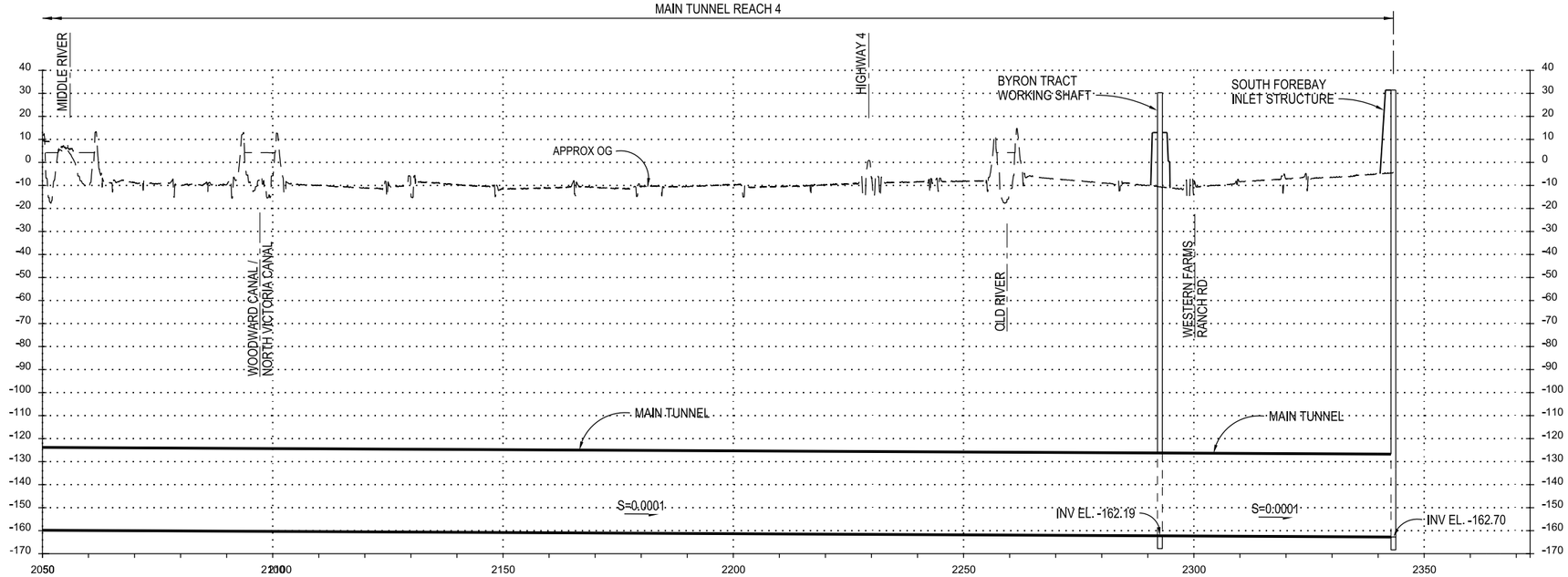

PROFILE
VERTICAL EXAGGERATION = x50

TUNNELS AND SHAFTS

VERIFY SCALE
BAR IS ONE INCH ON ORIGINAL DRAWING.
0 1"

REV	DATE	DESCRIPTION	SUB.	APPD
	12/23/2021	FINAL DRAFT BASELINE DRAWINGS		

DESIGNED: MARTIN ELLIS
DRAWN: RUSSELL TORADO
CHECKED: JOHN CAULFIELD
APPROVAL RECOMMENDED
APPROVAL BY

DELTA CONVEYANCE DESIGN & CONSTRUCTION AUTHORITY

ENGINEERING PROJECT REPORT
DELTA CONVEYANCE PROJECT
SINGLE TUNNEL - EASTERN CORRIDOR

MAIN TUNNEL PLAN AND PROFILE
SHEET 5 OF 5

PROJECT NO. W8X97000
SHEET NO. STE-C-1130TN
REV | SEQUENCE NO.

STE-C-1130TN_W8X97000.dgn

PLOT DATE:11/11/2021 PLOT TIME:4:18:53 PM

PLAN
1"=400'

NOTES:

1. ALT 38' ID TUNNELS SHOWN FOR 6,000 cfs.
2. TOPOGRAPHY DATA IS BASED ON USGS NATIONAL ELEVATION DATASET (NED). DATA IS FOR CONCEPTUAL USE ONLY.
3. SEE SOUTHERN FOREBAY COMPLEX FOR DISTURBANCE LIMITS.

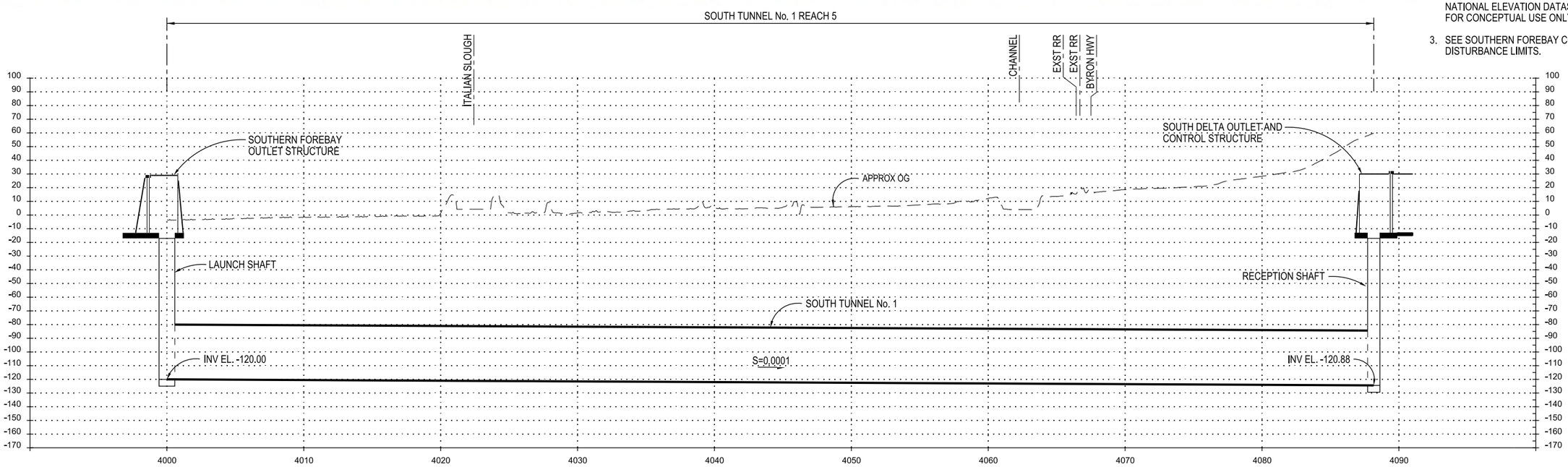

PROFILE
VERTICAL EXAGGERATION = x10

VERIFY SCALE
BAR IS ONE INCH ON ORIGINAL DRAWING.
0 1"

TUNNELS AND SHAFTS

REV	DATE	DESCRIPTION	SUB.	APPD
	12/23/2021	FINAL DRAFT BASELINE DRAWINGS		

DESIGNED: MARTIN ELLIS
DRAWN: RUSSELL TORADO
CHECKED: STEVE DUBNEWYCH
APPROVAL RECOMMENDED
APPROVAL BY

DELTA CONVEYANCE DESIGN & CONSTRUCTION AUTHORITY

ENGINEERING PROJECT REPORT
DELTA CONVEYANCE PROJECT
SINGLE TUNNEL - EASTERN CORRIDOR

SOUTH TUNNEL No. 1
PLAN AND PROFILE

PROJECT NO. W8X97000
SHEET NO. STE-C-1140TN
REV
SEQUENCE NO.

STE-C-1140TN_W8X97000.dgn

PLOT DATE:11/11/2021 PLOT TIME:12:18:26 PM

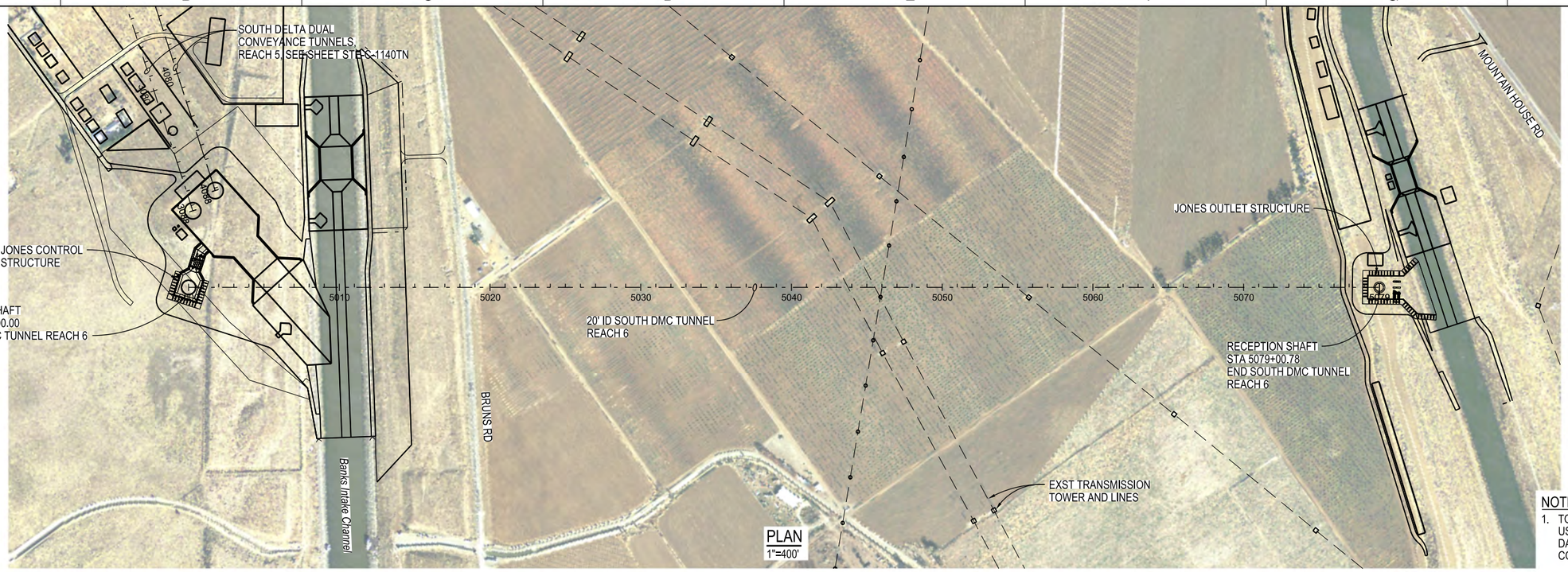

PLAN
1"=400'

0 400 800
SCALE IN FEET

NOTE:

1. TOPOGRAPHY DATA IS BASED ON USGS NATIONAL ELEVATION DATASET (NED). DATA IS FOR CONCEPTUAL USE ONLY.
2. SEE SOUTHERN FOREBAY COMPLEX FOR DISTURBANCE LIMITS.
3. 20' ID SOUTH DMC TUNNEL SHOWN FOR 7,500 OPTION

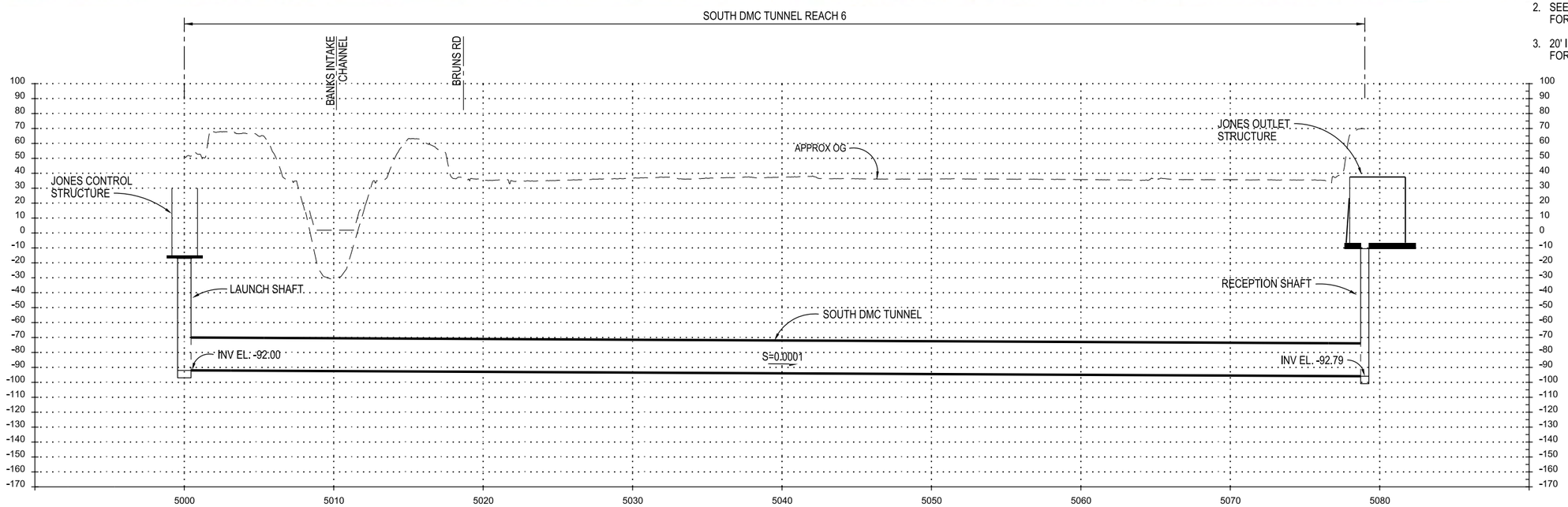

PROFILE
VERTICAL EXAGGERATION = x10

TUNNELS AND SHAFTS

VERIFY SCALE
BAR IS ONE INCH ON ORIGINAL DRAWING.
0 1"

REV	DATE	DESCRIPTION	SUB.	APPD
	12/23/2021	FINAL DRAFT BASELINE DRAWINGS		

DESIGNED: MARTIN ELLIS
DRAWN: RUSSELL TORADO
CHECKED: STEVE DUBNEWYCH
APPROVAL RECOMMENDED
APPROVAL BY

DELTA CONVEYANCE DESIGN & CONSTRUCTION AUTHORITY

ENGINEERING PROJECT REPORT
DELTA CONVEYANCE PROJECT
SINGLE TUNNEL - EASTERN CORRIDOR

SOUTH DMC TUNNEL
PLAN AND PROFILE

PROJECT NO. W8X97000
SHEET NO. STE-C-1150TN
REV
SEQUENCE NO.

STE-C-1150TN_W8X97000.dgn

PLOT DATE:11/11/2021 PLOT TIME:2:50:16 PM

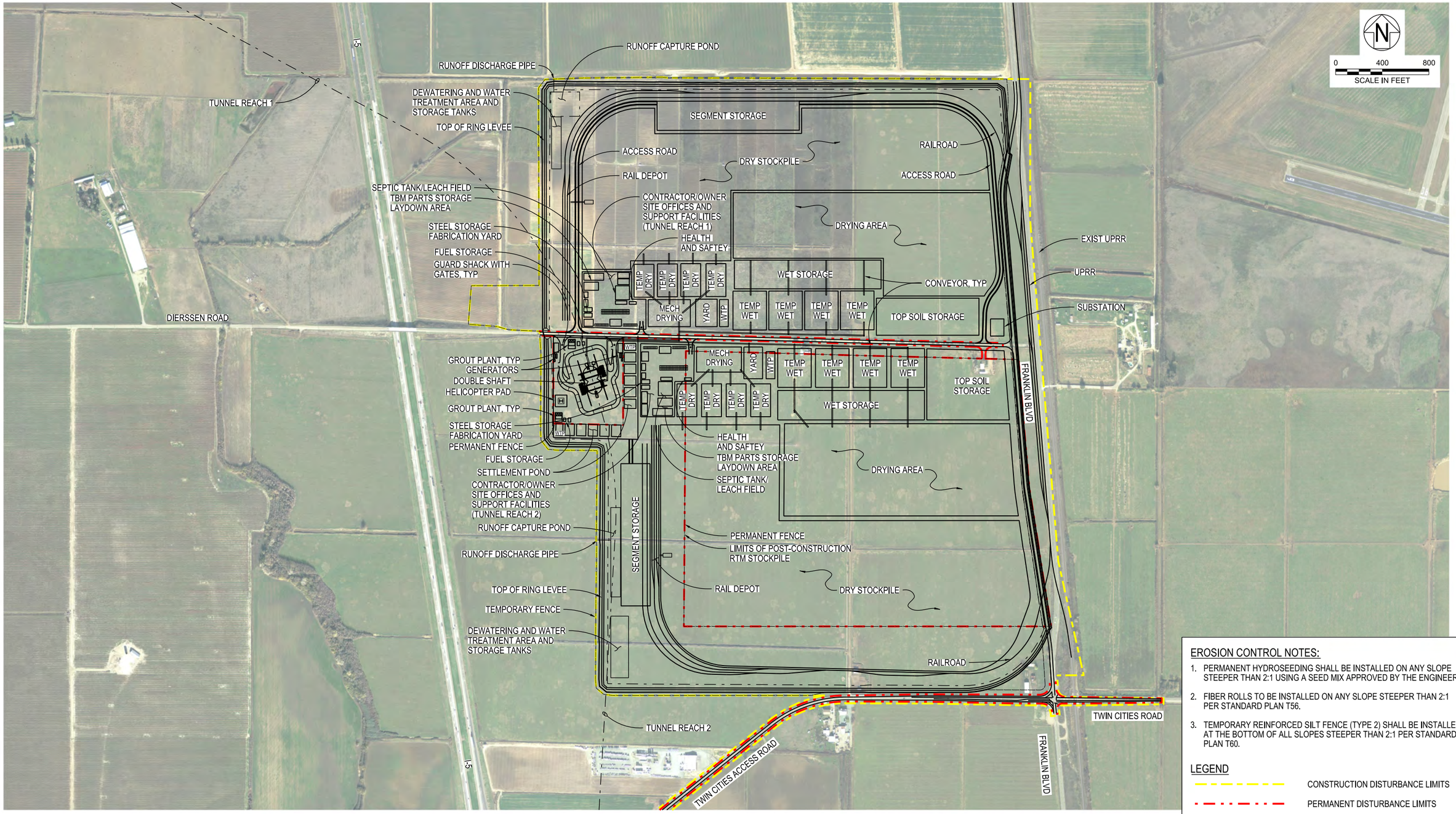

EROSION CONTROL NOTES:

1. PERMANENT HYDROSEEDING SHALL BE INSTALLED ON ANY SLOPE STEEPER THAN 2:1 USING A SEED MIX APPROVED BY THE ENGINEER.
2. FIBER ROLLS TO BE INSTALLED ON ANY SLOPE STEEPER THAN 2:1 PER STANDARD PLAN T56.
3. TEMPORARY REINFORCED SILT FENCE (TYPE 2) SHALL BE INSTALLED AT THE BOTTOM OF ALL SLOPES STEEPER THAN 2:1 PER STANDARD PLAN T60.

LEGEND

CONSTRUCTION DISTURBANCE LIMITS

PERMANENT DISTURBANCE LIMITS

PLAN
1"=400'

TUNNELS AND SHAFTS

VERIFY SCALE
BAR IS ONE INCH ON ORIGINAL DRAWING.
0 1"

REV	DATE	DESCRIPTION	SUB.	APPD
	12/23/2021	FINAL DRAFT BASELINE DRAWINGS		

DESIGNED: MARTIN ELLIS
DRAWN: RUSSELL TORADO
CHECKED: STEVE DUBNEWYCH
APPROVAL RECOMMENDED
APPROVAL BY

DELTA CONVEYANCE DESIGN & CONSTRUCTION AUTHORITY

ENGINEERING PROJECT REPORT
DELTA CONVEYANCE PROJECT
SINGLE TUNNEL - EASTERN CORRIDOR

TWIN CITIES DBL LAUNCH SHAFT SITE PLAN DISTURBANCE LIMITS

PROJECT NO. W8X97000
SHEET NO. STE-C-1170TN
REV
SEQUENCE NO.

STE-C-1170TN_W8X97000.dgn

PLOT DATE:11/11/2021 PLOT TIME:12:17:34 PM

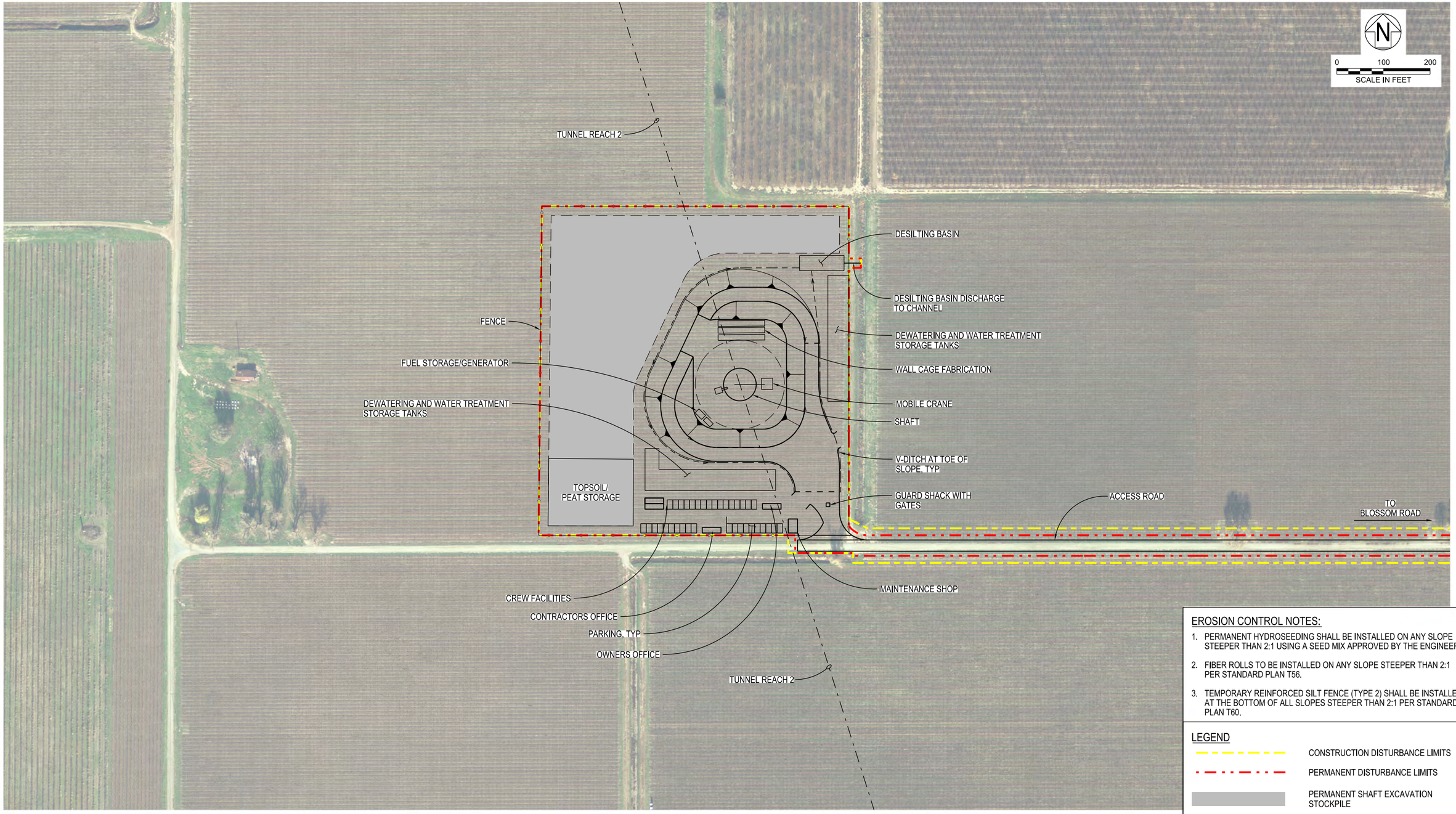

EROSION CONTROL NOTES:

1. PERMANENT HYDROSEEDING SHALL BE INSTALLED ON ANY SLOPE STEEPER THAN 2:1 USING A SEED MIX APPROVED BY THE ENGINEER.
2. FIBER ROLLS TO BE INSTALLED ON ANY SLOPE STEEPER THAN 2:1 PER STANDARD PLAN T56.
3. TEMPORARY REINFORCED SILT FENCE (TYPE 2) SHALL BE INSTALLED AT THE BOTTOM OF ALL SLOPES STEEPER THAN 2:1 PER STANDARD PLAN T60.

LEGEND

- CONSTRUCTION DISTURBANCE LIMITS
- PERMANENT DISTURBANCE LIMITS
- PERMANENT SHAFT EXCAVATION STOCKPILE

PLAN
1"=100'

TUNNELS AND SHAFTS

VERIFY SCALE
BAR IS ONE INCH ON ORIGINAL DRAWING.
0 1"

REV	DATE	DESCRIPTION	SUB.	APPD
	12/23/2021	FINAL DRAFT BASELINE DRAWINGS		

DESIGNED: MARTIN ELLIS
DRAWN: RUSSELL TORADO
CHECKED: STEVE DUBNEWYCH
APPROVAL RECOMMENDED
APPROVAL BY

DELTA CONVEYANCE DESIGN & CONSTRUCTION AUTHORITY

ENGINEERING PROJECT REPORT
DELTA CONVEYANCE PROJECT
SINGLE TUNNEL - EASTERN CORRIDOR

NEW HOPE TRACT MAINT SHAFT SITE PLAN
DISTURBANCE LIMITS

PROJECT NO. W8X97000
SHEET NO. STE-C-1180TN
REV | SEQUENCE NO.

STE-C-1180TN_W8X97000.dgn

PLOT DATE:11/11/2021 PLOT TIME:3:16:51 PM

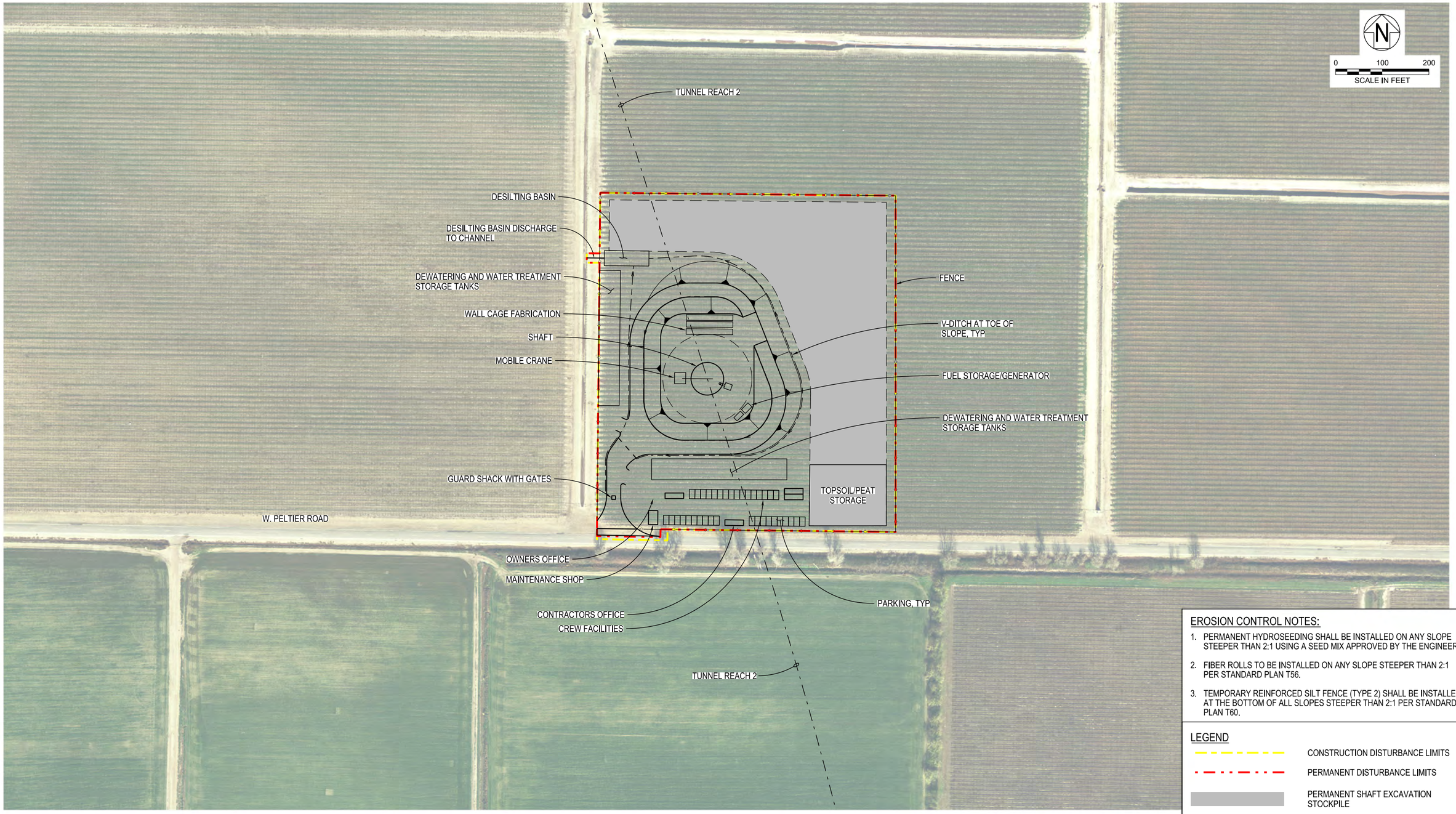

EROSION CONTROL NOTES:

1. PERMANENT HYDROSEEDING SHALL BE INSTALLED ON ANY SLOPE STEEPER THAN 2:1 USING A SEED MIX APPROVED BY THE ENGINEER.
2. FIBER ROLLS TO BE INSTALLED ON ANY SLOPE STEEPER THAN 2:1 PER STANDARD PLAN T56.
3. TEMPORARY REINFORCED SILT FENCE (TYPE 2) SHALL BE INSTALLED AT THE BOTTOM OF ALL SLOPES STEEPER THAN 2:1 PER STANDARD PLAN T60.

LEGEND

- CONSTRUCTION DISTURBANCE LIMITS
- PERMANENT DISTURBANCE LIMITS
- PERMANENT SHAFT EXCAVATION STOCKPILE

PLAN
1"=100'

TUNNELS AND SHAFTS

VERIFY SCALE
BAR IS ONE INCH ON ORIGINAL DRAWING.
0 1"

REV	DATE	DESCRIPTION	SUB.	APPD
	12/23/2021	FINAL DRAFT BASELINE DRAWINGS		

DESIGNED: MARTIN ELLIS
DRAWN: RUSSELL TORADO
CHECKED: STEVE DUBNEWYCH
APPROVAL RECOMMENDED
APPROVAL BY

DELTA CONVEYANCE DESIGN & CONSTRUCTION AUTHORITY

ENGINEERING PROJECT REPORT
DELTA CONVEYANCE PROJECT
SINGLE TUNNEL - EASTERN CORRIDOR

CANAL RANCH TRACT MAINT SHAFT SITE PLAN DISTURBANCE LIMITS

PROJECT NO. W8X97000
SHEET NO. STE-C-1190TN
REV
SEQUENCE NO.

STE-C-1190TN_W8X97000.dgn

PLOT DATE:11/11/2021 PLOT TIME:12:18:01 PM

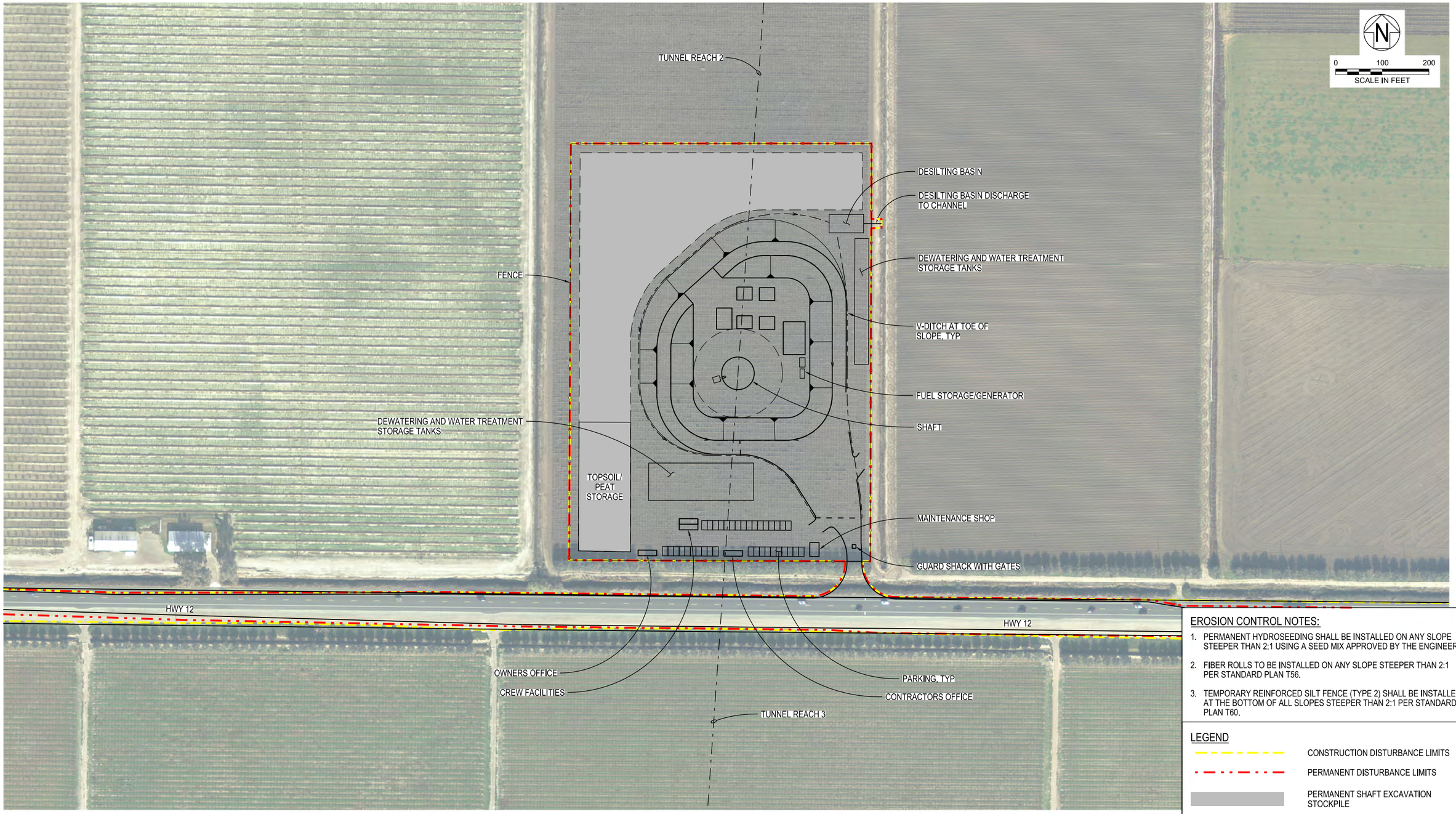

EROSION CONTROL NOTES:

1. PERMANENT HYDROSEEDING SHALL BE INSTALLED ON ANY SLOPE STEEPER THAN 2:1 USING A SEED MIX APPROVED BY THE ENGINEER.
2. FIBER ROLLS TO BE INSTALLED ON ANY SLOPE STEEPER THAN 2:1 PER STANDARD PLAN T56.
3. TEMPORARY REINFORCED SILT FENCE (TYPE 2) SHALL BE INSTALLED AT THE BOTTOM OF ALL SLOPES STEEPER THAN 2:1 PER STANDARD PLAN T60.

LEGEND

- CONSTRUCTION DISTURBANCE LIMITS
- PERMANENT DISTURBANCE LIMITS
- PERMANENT SHAFT EXCAVATION STOCKPILE

PLAN
1"=100'

TUNNELS AND SHAFTS

VERIFY SCALE
BAR IS ONE INCH ON ORIGINAL DRAWING.
0 1"

REV	DATE	DESCRIPTION	SUB.	APPD
	12/23/2021	FINAL DRAFT BASELINE DRAWINGS		

DESIGNED: MARTIN ELLIS
DRAWN: RUSSELL TORADO
CHECKED: STEVE DUBNEWYCH
APPROVAL RECOMMENDED
APPROVAL BY

DELTA CONVEYANCE DESIGN & CONSTRUCTION AUTHORITY

ENGINEERING PROJECT REPORT
DELTA CONVEYANCE PROJECT
SINGLE TUNNEL - EASTERN CORRIDOR

TERMINOUS TRACT RECEPTION SHAFT SITE PLAN DISTURBANCE LIMITS

PROJECT NO. W8X97000
SHEET NO. STE-C-1200TN
REV | SEQUENCE NO.

STE-C-1200TN_W8X97000.dgn

PLOT DATE:11/11/2021 PLOT TIME:12:19:11 PM

PLAN
1"=100'

EROSION CONTROL NOTES:

1. PERMANENT HYDROSEEDING SHALL BE INSTALLED ON ANY SLOPE STEEPER THAN 2:1 USING A SEED MIX APPROVED BY THE ENGINEER.
2. FIBER ROLLS TO BE INSTALLED ON ANY SLOPE STEEPER THAN 2:1 PER STANDARD PLAN T56.
3. TEMPORARY REINFORCED SILT FENCE (TYPE 2) SHALL BE INSTALLED AT THE BOTTOM OF ALL SLOPES STEEPER THAN 2:1 PER STANDARD PLAN T60.

LEGEND

- CONSTRUCTION DISTURBANCE LIMITS
- PERMANENT DISTURBANCE LIMITS
- PERMANENT SHAFT EXCAVATION STOCKPILE

TUNNELS AND SHAFTS

VERIFY SCALE
BAR IS ONE INCH ON ORIGINAL DRAWING.
0 1"

REV	DATE	DESCRIPTION	SUB.	APPD
	12/23/2021	FINAL DRAFT BASELINE DRAWINGS		

DESIGNED: MARTIN ELLIS
DRAWN: RUSSELL TORADO
CHECKED: STEVE DUBNEWYCH
APPROVAL RECOMMENDED
APPROVAL BY

DELTA CONVEYANCE DESIGN & CONSTRUCTION AUTHORITY

ENGINEERING PROJECT REPORT
DELTA CONVEYANCE PROJECT
SINGLE TUNNEL - EASTERN CORRIDOR

KING ISLAND MAINTENANCE SHAFT SITE PLAN DISTURBANCE LIMITS

PROJECT NO. W8X97000
SHEET NO. STE-C-1210TN
REV | SEQUENCE NO.

STE-C-1210TN_W8X97000.dgn

PLOT DATE:11/11/2021 PLOT TIME:12:17:14 PM

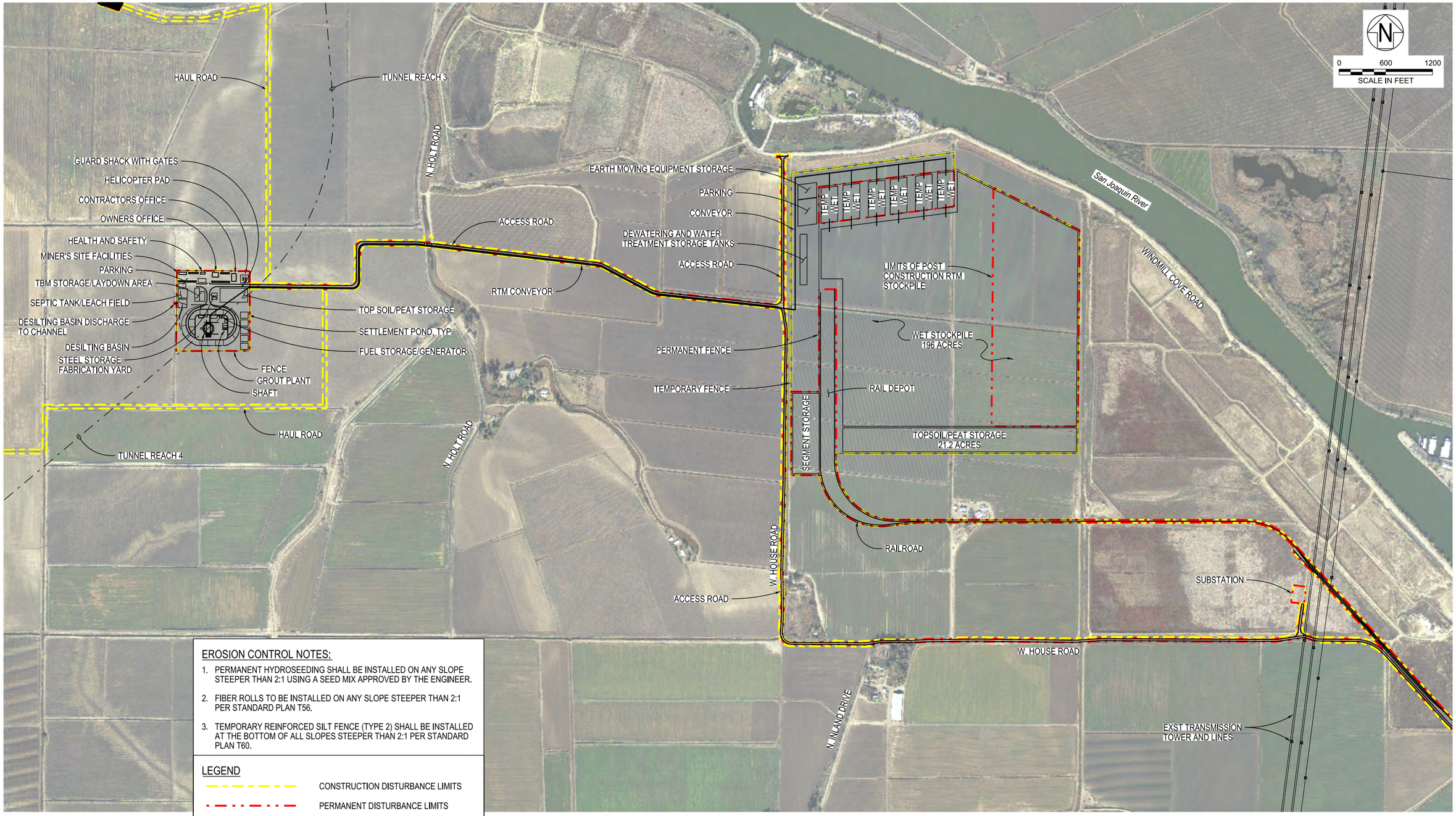

EROSION CONTROL NOTES:

1. PERMANENT HYDROSEEDING SHALL BE INSTALLED ON ANY SLOPE STEEPER THAN 2:1 USING A SEED MIX APPROVED BY THE ENGINEER.
2. FIBER ROLLS TO BE INSTALLED ON ANY SLOPE STEEPER THAN 2:1 PER STANDARD PLAN T56.
3. TEMPORARY REINFORCED SILT FENCE (TYPE 2) SHALL BE INSTALLED AT THE BOTTOM OF ALL SLOPES STEEPER THAN 2:1 PER STANDARD PLAN T60.

LEGEND

- CONSTRUCTION DISTURBANCE LIMITS
- PERMANENT DISTURBANCE LIMITS

PLAN
1"=600'

TUNNELS AND SHAFTS

VERIFY SCALE
BAR IS ONE INCH ON ORIGINAL DRAWING.
0 1"

REV	DATE	DESCRIPTION	SUB.	APPD
	12/23/2021	FINAL DRAFT BASELINE DRAWINGS		

DESIGNED: MARTIN ELLIS
DRAWN: RUSSELL TORAD0
CHECKED: STEVE DUBNEWYCH
APPROVAL RECOMMENDED
APPROVAL BY

DELTA CONVEYANCE DESIGN & CONSTRUCTION AUTHORITY

ENGINEERING PROJECT REPORT
DELTA CONVEYANCE PROJECT
SINGLE TUNNEL - EASTERN CORRIDOR

LOWER ROBERTS IS. LAUNCH/RECEPTION SITE PLAN
DISTURBANCE LIMITS

PROJECT NO. W8X97000
SHEET NO. STE-C-1220TN
REV | SEQUENCE NO.

STE-C-1220TN_W8X97000.dgn

PLOT DATE:11/11/2021 PLOT TIME:2:49:48 PM

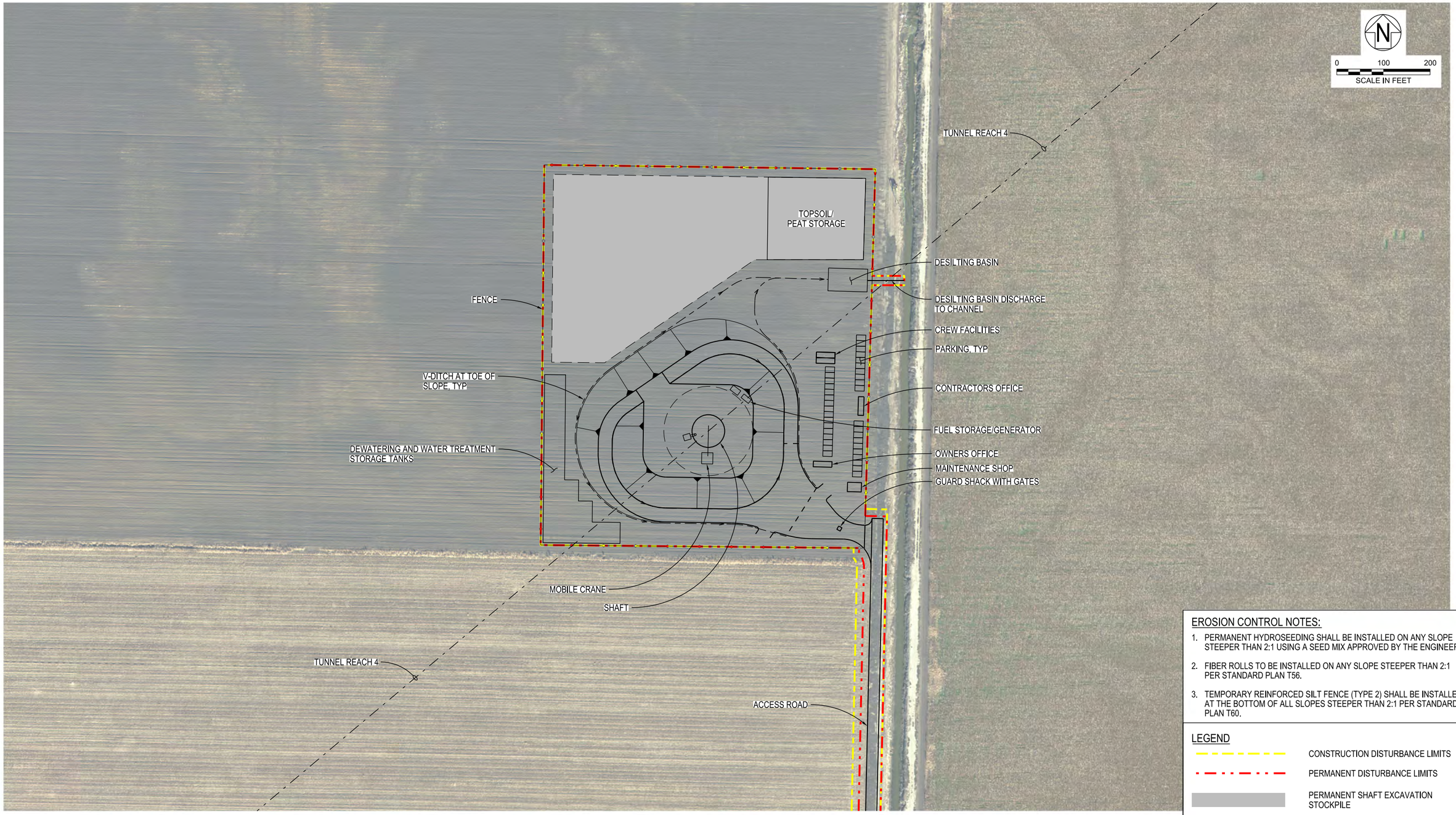

EROSION CONTROL NOTES:

1. PERMANENT HYDROSEEDING SHALL BE INSTALLED ON ANY SLOPE STEEPER THAN 2:1 USING A SEED MIX APPROVED BY THE ENGINEER.
2. FIBER ROLLS TO BE INSTALLED ON ANY SLOPE STEEPER THAN 2:1 PER STANDARD PLAN T56.
3. TEMPORARY REINFORCED SILT FENCE (TYPE 2) SHALL BE INSTALLED AT THE BOTTOM OF ALL SLOPES STEEPER THAN 2:1 PER STANDARD PLAN T60.

LEGEND

- CONSTRUCTION DISTURBANCE LIMITS
- PERMANENT DISTURBANCE LIMITS
- PERMANENT SHAFT EXCAVATION STOCKPILE

PLAN
1"=100'

TUNNELS AND SHAFTS

VERIFY SCALE
BAR IS ONE INCH ON ORIGINAL DRAWING.
0 1"

REV	DATE	DESCRIPTION	SUB.	APPD
	12/23/2021	FINAL DRAFT BASELINE DRAWINGS		

DESIGNED: MARTIN ELLIS
DRAWN: RUSSELL TORADO
CHECKED: STEVE DUBNEWYCH
APPROVAL RECOMMENDED
APPROVAL BY

DELTA CONVEYANCE DESIGN & CONSTRUCTION AUTHORITY

ENGINEERING PROJECT REPORT
DELTA CONVEYANCE PROJECT
SINGLE TUNNEL - EASTERN CORRIDOR

UPPER JONES TRACT MAINT SHAFT SITE PLAN DISTURBANCE LIMITS

PROJECT NO. W8X97000
SHEET NO. STE-C-1230TN
REV | SEQUENCE NO.

STE-C-1230TN_W8X97000.dgn

PLOT DATE:11/11/2021 PLOT TIME:12:18:15 PM

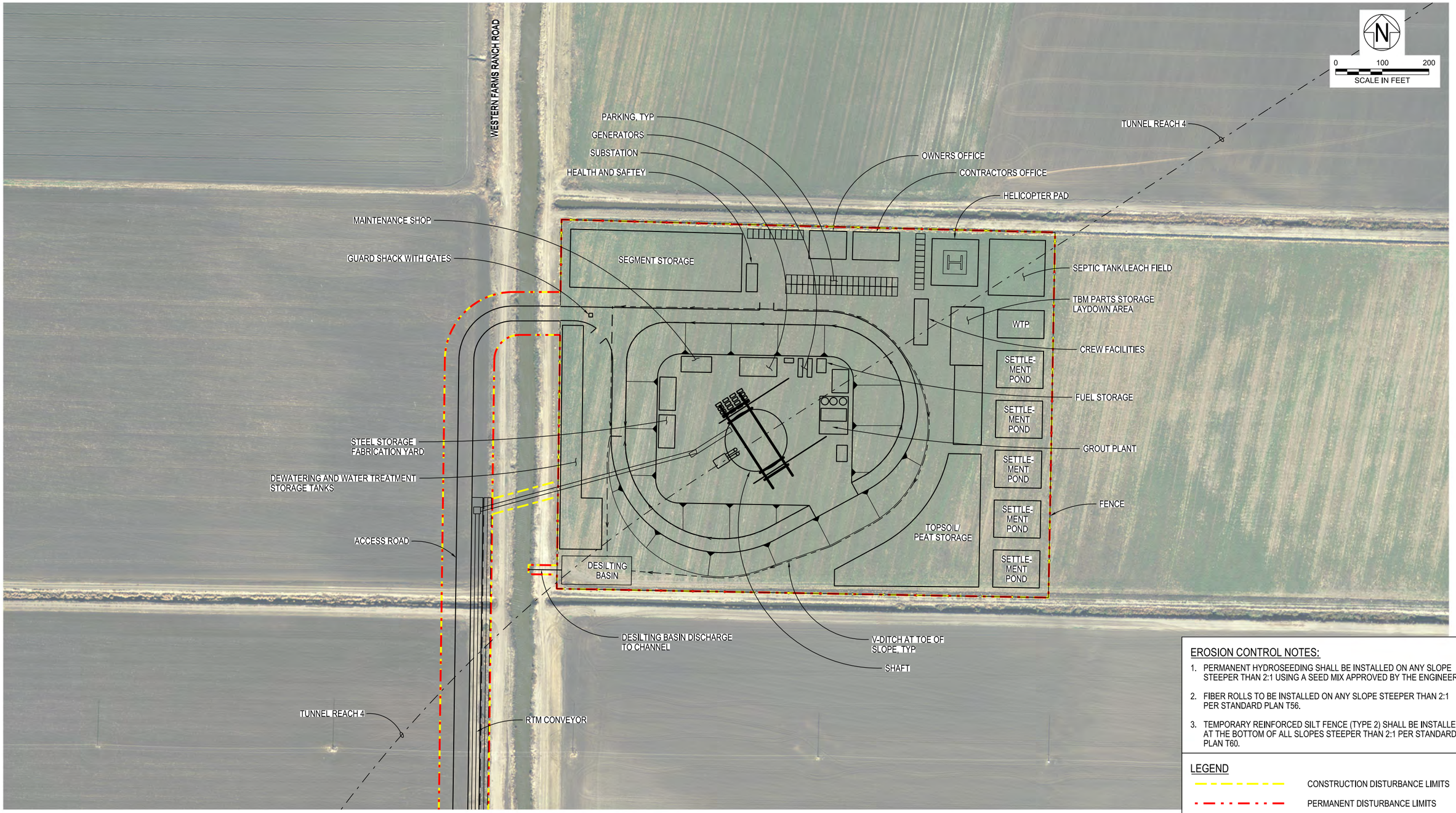

EROSION CONTROL NOTES:

1. PERMANENT HYDROSEEDING SHALL BE INSTALLED ON ANY SLOPE STEEPER THAN 2:1 USING A SEED MIX APPROVED BY THE ENGINEER.
2. FIBER ROLLS TO BE INSTALLED ON ANY SLOPE STEEPER THAN 2:1 PER STANDARD PLAN T56.
3. TEMPORARY REINFORCED SILT FENCE (TYPE 2) SHALL BE INSTALLED AT THE BOTTOM OF ALL SLOPES STEEPER THAN 2:1 PER STANDARD PLAN T60.

LEGEND

CONSTRUCTION DISTURBANCE LIMITS

PERMANENT DISTURBANCE LIMITS

PLAN
1"=100'

TUNNELS AND SHAFTS

VERIFY SCALE
BAR IS ONE INCH ON ORIGINAL DRAWING.
0 1"

REV	DATE	DESCRIPTION	SUB.	APPD
	12/23/2021	FINAL DRAFT BASELINE DRAWINGS		

DESIGNED: MARTIN ELLIS
DRAWN: RUSSELL TORADO
CHECKED: STEVE DUBNEWYCH
APPROVAL RECOMMENDED
APPROVAL BY

DCA
DELTA CONVEYANCE DESIGN & CONSTRUCTION AUTHORITY

ENGINEERING PROJECT REPORT
DELTA CONVEYANCE PROJECT
SINGLE TUNNEL - EASTERN CORRIDOR

BYRON TRACT WORKING SHAFT SITE PLAN DISTURBANCE LIMITS

PROJECT NO. W8X97000
SHEET NO. STE-C-1240TN
REV
SEQUENCE NO.

STE-C-1240TN_W8X97000.dgn

PLOT DATE:11/11/2021 PLOT TIME:12:19:30 PM

NOTES:

1. CROSS SECTION SHOWN IS A GENERAL CONCEPT AND DOES NOT REFLECT DIMENSIONS SHOWN FOR EACH SHAFT LOCATION DRAWING.
2. SECTION SHOULD NOT BE USED TO CALCULATE VOLUMES.
3. AREA OF GROUND TREATMENT WOULD BE THE SAME AS THE PAD LEVEL AREA.
4. FOR SHAFT PAD DETAILS AT INTAKES STRUCTURES, SOUTHERN FOREBAY AND SOUTH DELTA CONNECTIONS, REFER TO RELEVANT FACILITY DRAWINGS.

SHAFT LOCATION	EXISTING GROUND LEVEL (EL)	PAD LEVEL TOP OF D'WALL (EL)	PAD HEIGHT (ABOVE GL) (FT)	DEPTH OF GROUND IMPROVEMENT (FT) *	PAD SITE WIDTH (FT)	PAD SITE LENGTH (FT)	FINISHED ELEVATION (FT)
	G	X	H1	H2	W	L	EL
TWIN CITIES (2)	10	21	11	0	300	500	35.00
NEW HOPE TRACT SHAFT	6	19	13	40	200	235	36.00
CANAL RANCH RD SHAFT	3	15	12	20	200	235	36.00
TERMINOUS TRACT SHAFT	-3	13	16	20	250	300	34.75
KING ISLAND SHAFT	-12	13	25	15	200	235	34.00
LOWER ROBERTS ISLAND SHAFT	-11	13	24	30	320	420	30.30
UPPER JONES TRACT SHAFT	-9	13	22	15	200	235	30.30
BYRON TRACT WORKING SHAFT	-9	13	22	50	320	420	30.30

* NOTE - GROUND IMPROVEMENT DEPTHS ARE PRELIMINARY PENDING FUTURE GEOTECHNICAL EXPLORATION AND TESTING.

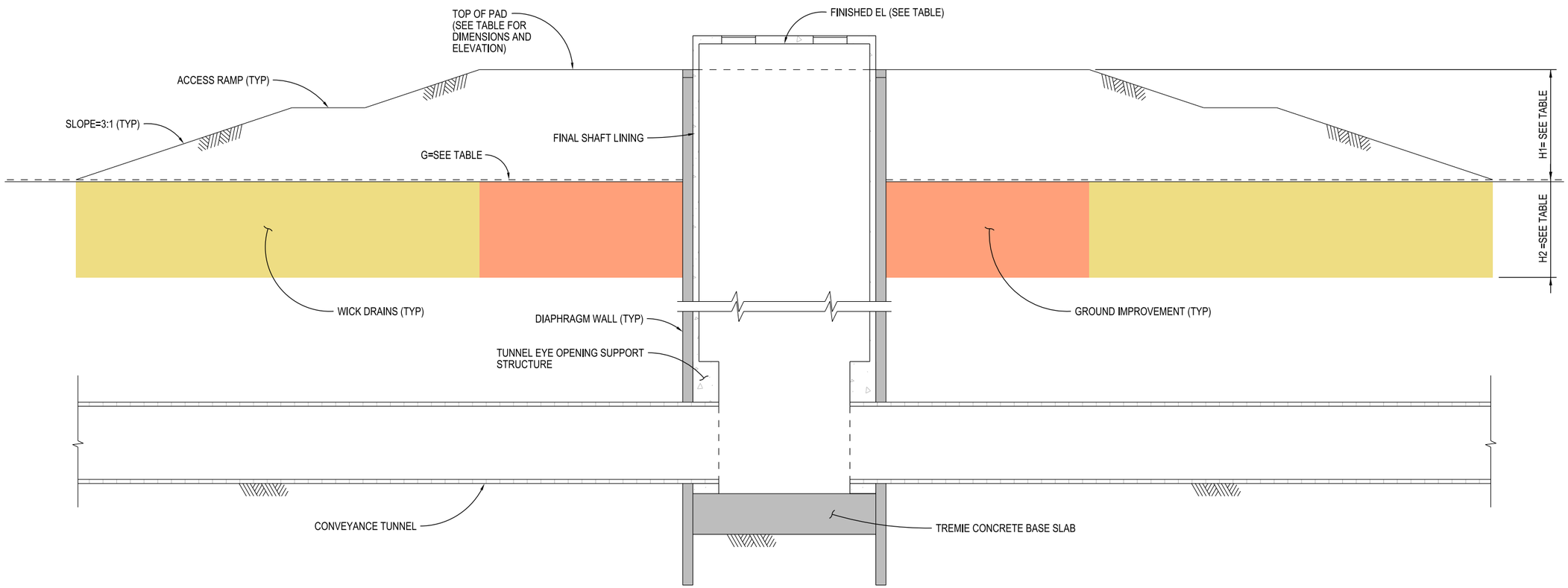

SHAFT PAD SECTION - WET EXCAVATION WITH DIAPHRAGM WALLS
(SINGLE SHAFT SECTION SHOWN)
NOT TO SCALE

TUNNELS AND SHAFTS

VERIFY SCALE
BAR IS ONE INCH ON ORIGINAL DRAWING.
0 1"

REV	DATE	DESCRIPTION	SUB.	APPD
	12/23/2021	FINAL DRAFT BASELINE DRAWINGS		

DESIGNED: MARTIN ELLIS
DRAWN: RUSSELL TORADO
CHECKED: STEVE DUBNEWYCH
APPROVAL RECOMMENDED
APPROVAL BY

DCA DELTA CONVEYANCE DESIGN & CONSTRUCTION AUTHORITY

ENGINEERING PROJECT REPORT
DELTA CONVEYANCE PROJECT
SINGLE TUNNEL - EASTERN CORRIDOR

SHAFT PAD SECTION
WET EXCAVATION WITH D-WALL

PROJECT NO. W8X97000
SHEET NO. STE-S-5160TN
REV
SEQUENCE NO.

STE-S-5160TN_W8X97000.dgn

PLOT DATE:11/11/2021 PLOT TIME:2:29:30 PM

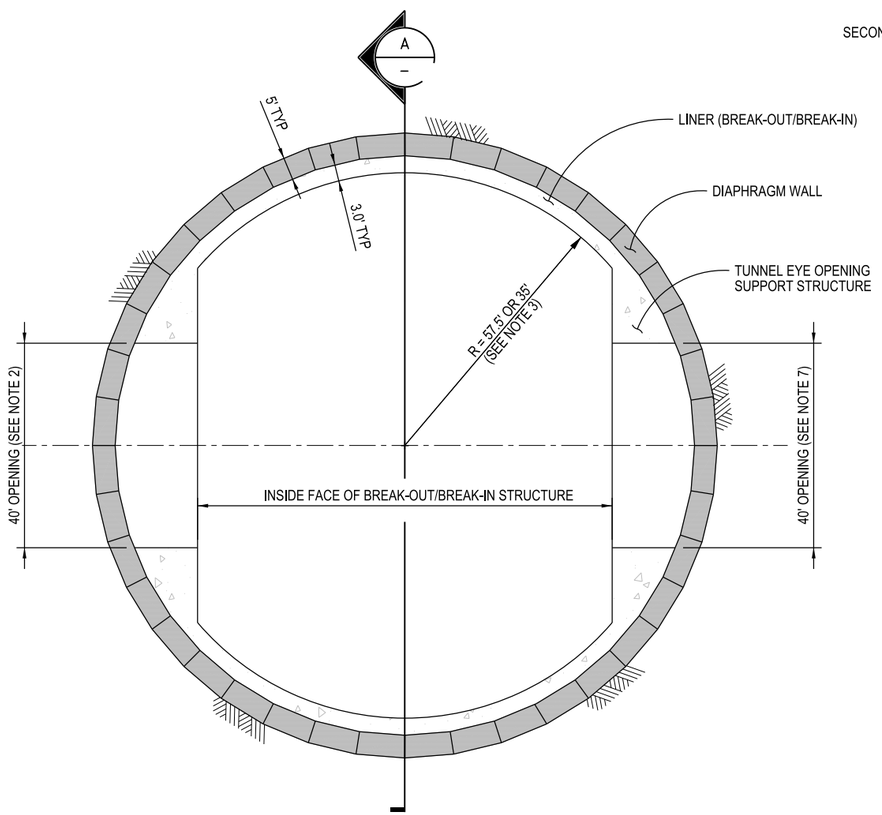

1 SHAFT PLAN
NOT TO SCALE

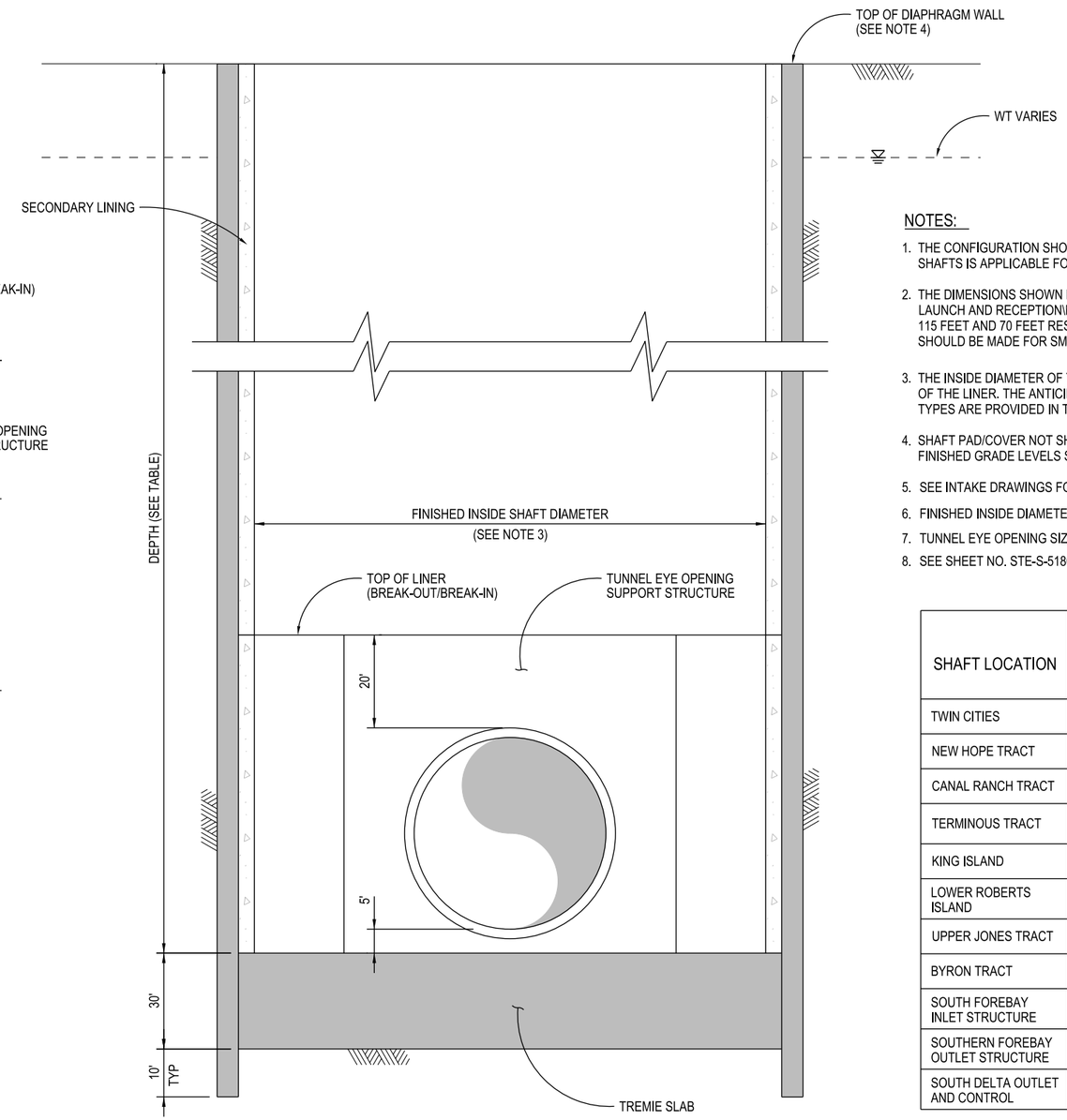

A SECTION
NOT TO SCALE

NOTES:

1. THE CONFIGURATION SHOWN HEREON FOR THE LAUNCH AND RECEPTION SHAFTS IS APPLICABLE FOR THE MAIN TUNNELS.
2. THE DIMENSIONS SHOWN HEREON ARE APPLICABLE FOR THE SINGLE DRIVE LAUNCH AND RECEPTION\MAINTENANCE SHAFTS WITH AN INSIDE DIAMETER OF 115 FEET AND 70 FEET RESPECTIVELY. ADJUSTMENTS TO THESE DIMENSIONS SHOULD BE MADE FOR SMALLER INSIDE DIAMETERS.
3. THE INSIDE DIAMETER OF THE SHAFTS IS MEASURED FROM THE INSIDE FACE OF THE LINER. THE ANTICIPATED INSIDE DIAMETERS OF THE VARIOUS SHAFT TYPES ARE PROVIDED IN TABLE.
4. SHAFT PAD/COVER NOT SHOWN FOR CLARITY, FINISHED GRADE LEVELS SHOWN ON DRAWING STC-S-5160TN.
5. SEE INTAKE DRAWINGS FOR SHAFT DETAILS AT INTAKES 2, 3 AND 5.
6. FINISHED INSIDE DIAMETERS SHOWN BASED ON 6,000 CFS OPTION.
7. TUNNEL EYE OPENING SIZE WOULD MATCH EXTERNAL SIZE OF TBM
8. SEE SHEET NO. STE-S-5180TN FOR DOUBLE SHAFT DIMENSIONS.

SHAFT LOCATION	SHAFT TYPE	FINISHED INSIDE DIA. (FEET)	DEPTH* (FEET)
TWIN CITIES	DOUBLE LAUNCH	SEE NOTE 8	SEE NOTE 8
NEW HOPE TRACT	MAINTENANCE	70	171
CANAL RANCH TRACT	MAINTENANCE	70	169
TERMINOUS TRACT	RECEIVING	70	169
KING ISLAND	MAINTENANCE	70	172
LOWER ROBERTS ISLAND	RECEIVING AND LAUNCH	115	174
UPPER JONES TRACT	MAINTENANCE	70	177
BYRON TRACT	WORKING	115	180
SOUTH FOREBAY INLET STRUCTURE	LAUNCH	115	196
SOUTHERN FOREBAY OUTLET STRUCTURE	LAUNCH x 2 ea	115	153
SOUTH DELTA OUTLET AND CONTROL	RECEIVING x 2 ea	90	156

*SHAFT DEPTH DOES NOT INCLUDE COLLAR HEIGHT ABOVE CONSTRUCTION PAD.

TUNNELS AND SHAFTS

VERIFY SCALE
BAR IS ONE INCH ON ORIGINAL DRAWING.
0 1"

REV	DATE	DESCRIPTION	SUB.	APPD
	12/23/2021	FINAL DRAFT BASELINE DRAWINGS		

DESIGNED: MARTIN ELLIS
DRAWN: RUSSELL TORADO
CHECKED: STEVE DUBNEWYCH
APPROVAL RECOMMENDED
APPROVAL BY

DELTA CONVEYANCE DESIGN & CONSTRUCTION AUTHORITY

ENGINEERING PROJECT REPORT
DELTA CONVEYANCE PROJECT
SINGLE TUNNEL - EASTERN CORRIDOR

SINGLE LAUNCH, RECEPTION, WORKING AND MAINTENANCE SHAFTS - PLAN AND SECTION

PROJECT NO. W8X97000
SHEET NO. STE-S-5170TN
REV
SEQUENCE NO.

STE-S-5170TN_W8X97000.dgn

PLOT DATE:11/11/2021 PLOT TIME:2:29:12 PM

NOTES:

1. THE FINISHED INSIDE DIAMETER OF THE SHAFTS IS MEASURED FROM THE INSIDE FACE OF THE LINER.
2. SHAFT PAD/COVER NOT SHOWN FOR CLARITY, FINISHED GRADE LEVELS SHOWN ON DRAWING STC-S-5160TN.
3. SEE INTAKE DRAWINGS FOR SHAFT DETAILS AT INTAKES 2, 3 AND 5.
4. TUNNEL EYE OPENING SIZE WOULD MATCH EXTERNAL SIZE OF TBM.

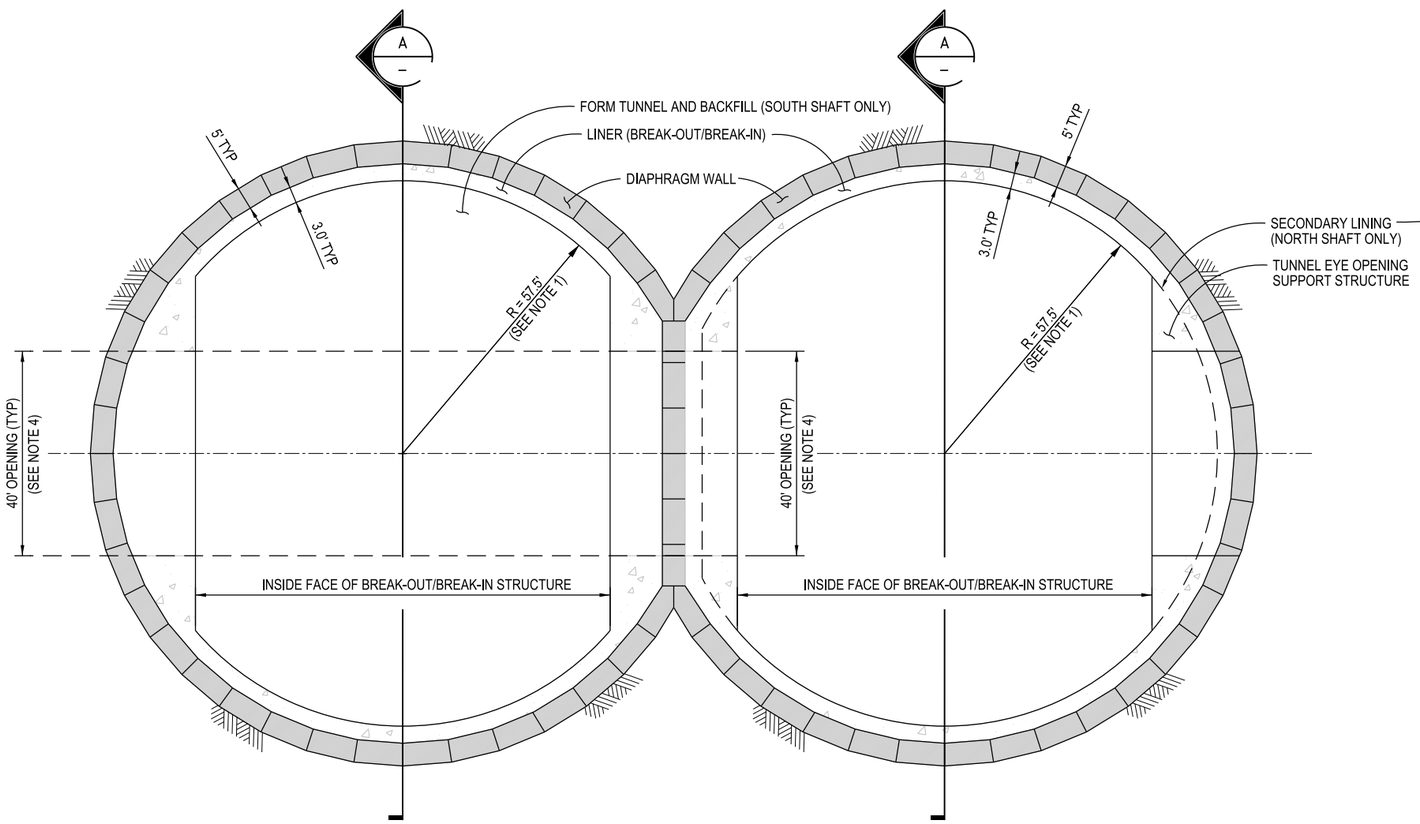

1 DOUBLE SHAFT PLAN
NOT TO SCALE

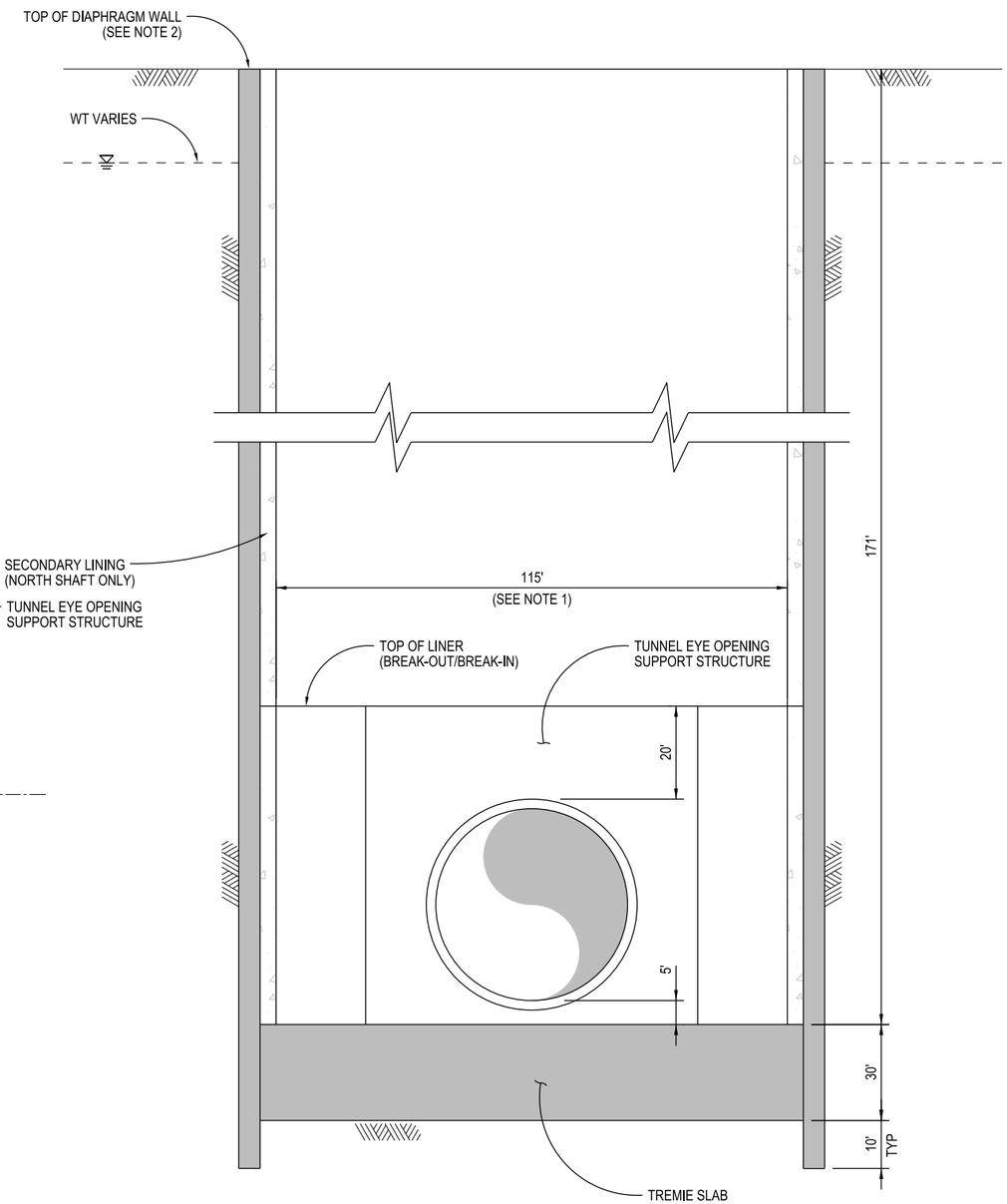

A SECTION
NOT TO SCALE

TUNNELS AND SHAFTS

VERIFY SCALE
BAR IS ONE INCH ON ORIGINAL DRAWING.
0 1"

REV	DATE	DESCRIPTION	SUB.	APPD
	12/23/2021	FINAL DRAFT BASELINE DRAWINGS		

DESIGNED: MARTIN ELLIS
DRAWN: RUSSELL TORADO
CHECKED: STEVE DUBNEWYCH
APPROVAL RECOMMENDED
APPROVAL BY

DELTA CONVEYANCE DESIGN & CONSTRUCTION AUTHORITY

ENGINEERING PROJECT REPORT
DELTA CONVEYANCE PROJECT
SINGLE TUNNEL - EASTERN CORRIDOR

TWIN CITIES DOUBLE LAUNCH SHAFT
PLAN AND SECTION

PROJECT NO. W8X97000
SHEET NO. STE-S-5180TN
REV
SEQUENCE NO.

STE-S-5180TN_W8X97000.dgn

PLOT DATE:11/11/2021 PLOT TIME:2:30:53 PM

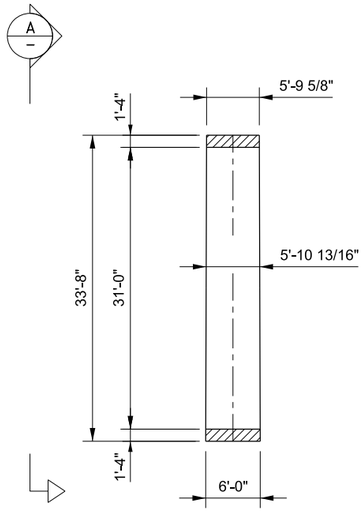

NOTES:

1. TAPER +/- 2.38" CORRESPONDING TO A MINIMUM CURVATURE RADIUS OF 1000 FEET.

B SECTION

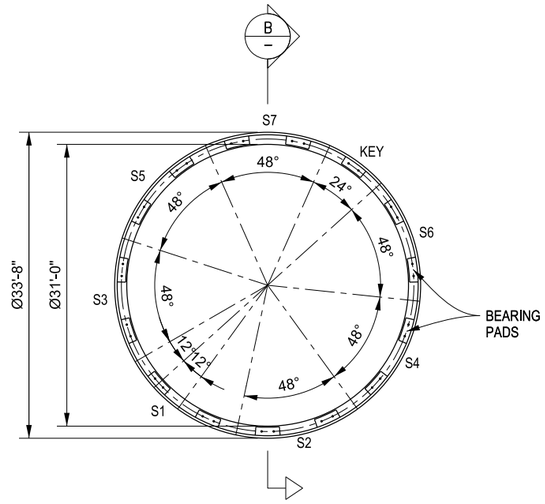

VIEW FROM TUNNEL FACE TOWARDS TUNNEL

A ELEVATION

1 31' DIA. MAIN TUNNEL LINING DETAIL PROJECT CAPACITY FOR 4,500 CFS OPTION

NOT TO SCALE

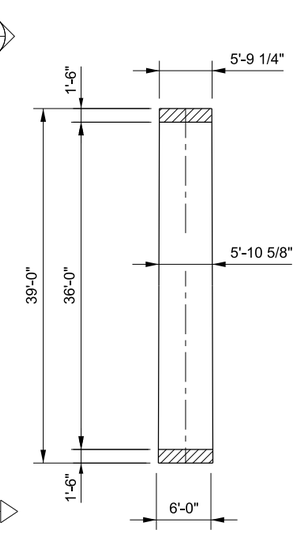

NOTES:

1. TAPER +/- 2.75" CORRESPONDING TO A MINIMUM CURVATURE RADIUS OF 1000 FEET.

D SECTION

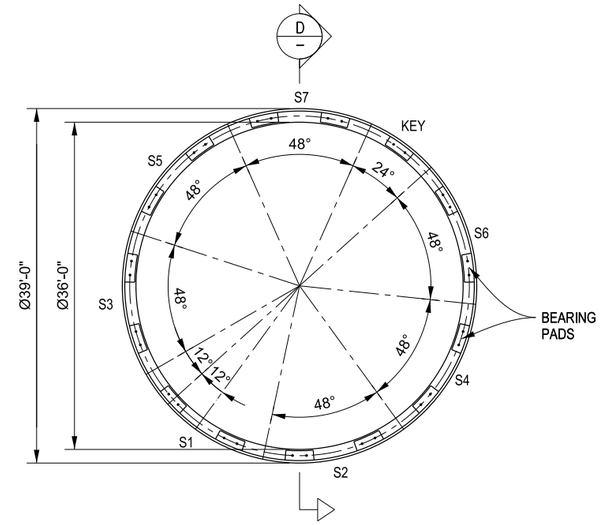

VIEW FROM TUNNEL FACE TOWARDS TUNNEL

C ELEVATION

2 36' DIA. MAIN TUNNEL LINING DETAIL PROJECT CAPACITY FOR 6,000 CFS OPTION

NOT TO SCALE

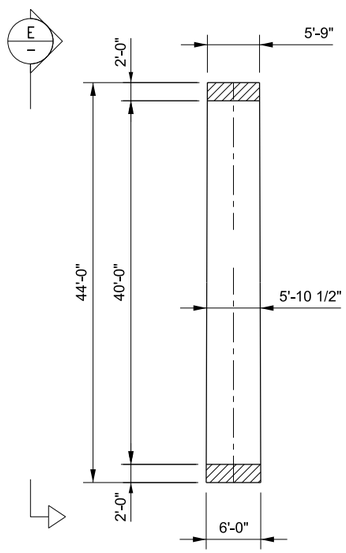

NOTES:

1. TAPER +/- 3" CORRESPONDING TO A MINIMUM CURVATURE RADIUS OF 1000 FEET.

F SECTION

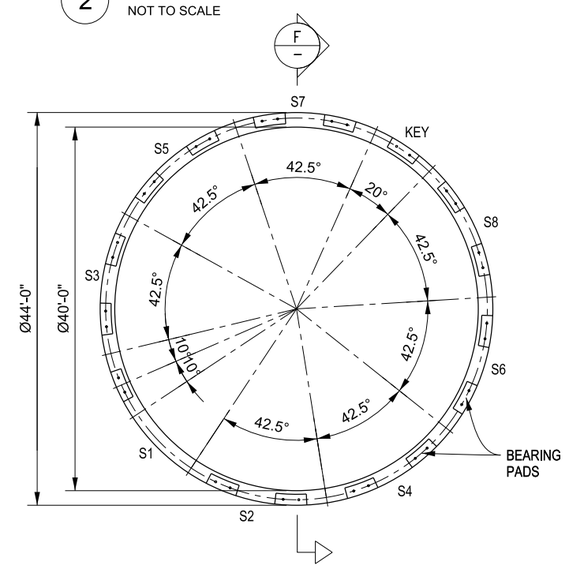

VIEW FROM TUNNEL FACE TOWARDS TUNNEL

E ELEVATION

3 40' DIA. MAIN TUNNEL AND DUAL SOUTH TUNNEL (7,500CFS OPTION) LINING DETAIL

NOT TO SCALE

TUNNELS AND SHAFTS

VERIFY SCALE
BAR IS ONE INCH ON ORIGINAL DRAWING.
0 1"

REV	DATE	DESCRIPTION	SUB.	APPD
	12/23/2021	FINAL DRAFT BASELINE DRAWINGS		

DESIGNED: MARTIN ELLIS
DRAWN: JUNE KASHIWADA
CHECKED: STEVE DUBNEWYCH
APPROVAL RECOMMENDED
APPROVAL BY

DELTA CONVEYANCE DESIGN & CONSTRUCTION AUTHORITY

ENGINEERING PROJECT REPORT
DELTA CONVEYANCE PROJECT
SINGLE TUNNEL - EASTERN CORRIDOR

MAIN TUNNELS SEGMENT LINING OPTIONS

PROJECT NO. W8X97000
SHEET NO. STE-S-5190TN
REV
SEQUENCE NO.

STE-S-5190TN_W8X97000.dgn

PLOT DATE:11/11/2021 PLOT TIME:2:31:32 PM

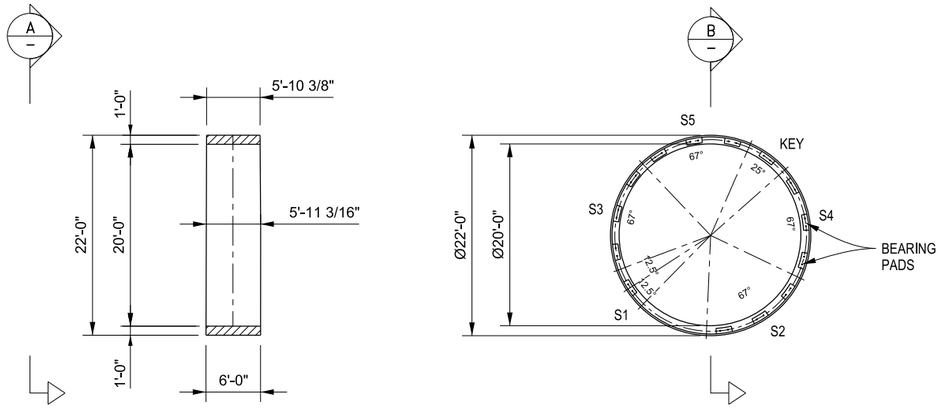

NOTES:

1. TAPER +/- 1 5/8" CORRESPONDING TO A MINIMUM CURVATURE RADIUS OF 1000 FEET.

B SECTION

VIEW FROM TUNNEL FACE TOWARDS TUNNEL

A ELEVATION

1 SINGLE 20' DIA. TUNNEL LINING DETAIL PROJECT CAPACITY FOR 1,500 CFS TO JONES OUTLET STRUCTURE

NOT TO SCALE

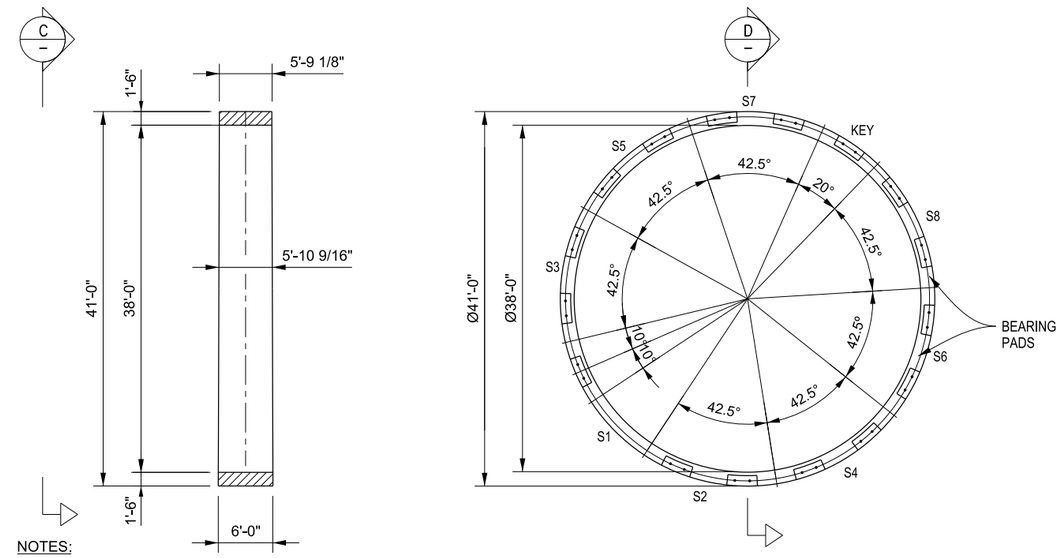

NOTES:

1. TAPER +/- 2.875" CORRESPONDING TO A MINIMUM CURVATURE RADIUS OF 1000 FEET.

D SECTION

VIEW FROM TUNNEL FACE TOWARDS TUNNEL

C ELEVATION

2 38' DIA. DUAL SOUTH TUNNEL LINING DETAIL PROJECT CAPACITY FOR 6,000 CFS OPTION

NOT TO SCALE

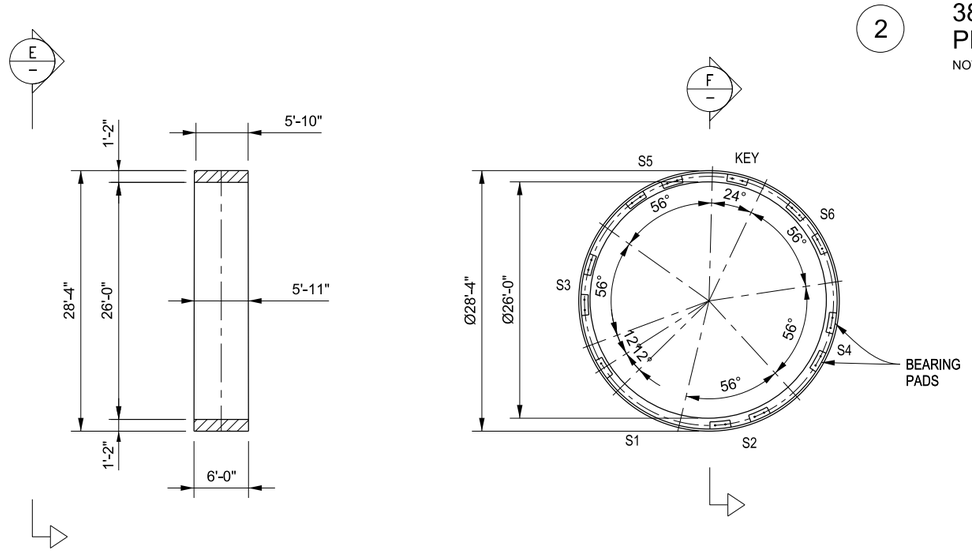

NOTES:

1. TAPER +/- 2.0" CORRESPONDING TO A MINIMUM CURVATURE RADIUS OF 1000 FEET.

F SECTION

VIEW FROM TUNNEL FACE TOWARDS TUNNEL

E ELEVATION

3 26' DIA. MAIN TUNNEL LINING DETAIL PROJECT CAPACITY FOR 3.000 CFS OPTION

NOT TO SCALE

TUNNELS AND SHAFTS

VERIFY SCALE
BAR IS ONE INCH ON ORIGINAL DRAWING.
0 1"

REV	DATE	DESCRIPTION	SUB.	APPD
	12/23/2021	FINAL DRAFT BASELINE DRAWINGS		

DESIGNED: MARTIN ELLIS
DRAWN: RUSSELL TORADO
CHECKED: STEVE DUBNEWYCH
APPROVAL RECOMMENDED
APPROVAL BY

DELTA CONVEYANCE DESIGN & CONSTRUCTION AUTHORITY

ENGINEERING PROJECT REPORT
DELTA CONVEYANCE PROJECT
SINGLE TUNNEL - EASTERN CORRIDOR

SOUTH TUNNELS SEGMENT LINING OPTIONS

PROJECT NO. W8X97000
SHEET NO. STE-S-5200TN
REV
SEQUENCE NO.

STE-S-5200TN_W8X97000.dgn

PLOT DATE:11/11/2021 PLOT TIME:2:34:10 PM