# BRIDGE SCHEDULE[3]

**Bridge Schedule**

| Station | Description | Length (ft) | Width (ft) | Location[1] | Function | Location[1] | Function | Location[1] | Function |
|---|---|---|---|---|---|---|---|---|---|
| 134+00 | BBID Canal Crossing | N/A | N/A | Access Road, Left | No bridge[2] | Patrol Road | No bridge[2] | Access Road, Right | No bridge[2] |
| 185+00 | BBID Canal Crossing | 100 | 20 | Access Road, Left | Bridge Needed for Temp Crossing | Patrol Road | Perm Crossing | Access Road, Right | Bridge Needed for Temp Crossing |
| 198+25 | Gas Line Crossing | 100 | 20 | Access Road, Left | Bridge Needed for Temp Crossing | Patrol Road | Perm Crossing | Access Road, Right | Bridge Needed for Temp Crossing |

Notes:

1. Left/right direction determined based on cross section looking in the direction of increased station.
2. Alternate means of crossing are available on nearby road. Canal to be temporarily taken out of service for actual crossing during non-irrigation season. Bypass pumping provided if needed.
3. Separate bridge schedule provided on STB-C-1133AQ for temporary bridges associated with work in/adjacent to Jones Inlet Canal.

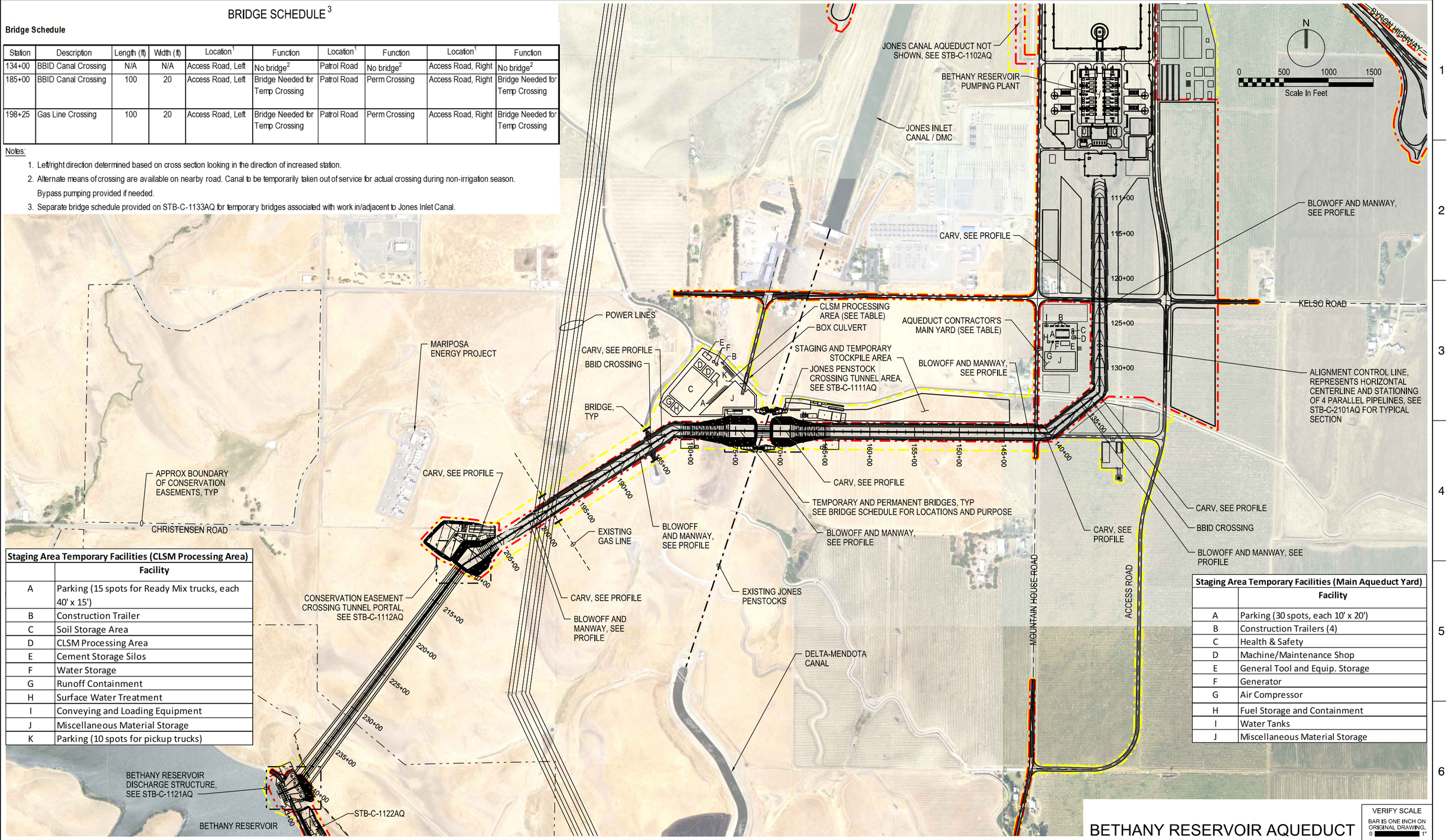


| Staging Area Temporary Facilities (CLSM Processing Area) | |
|---|---|
| | Facility |
| A | Parking (15 spots for Ready Mix trucks, each 40' x 15') |
| B | Construction Trailer |
| C | Soil Storage Area |
| D | CLSM Processing Area |
| E | Cement Storage Silos |
| F | Water Storage |
| G | Runoff Containment |
| H | Surface Water Treatment |
| I | Conveying and Loading Equipment |
| J | Miscellaneous Material Storage |
| K | Parking (10 spots for pickup trucks) |

| Staging Area Temporary Facilities (Main Aqueduct Yard) | |
|---|---|
| | Facility |
| A | Parking (30 spots, each 10' x 20') |
| B | Construction Trailers (4) |
| C | Health & Safety |
| D | Machine/Maintenance Shop |
| E | General Tool and Equip. Storage |
| F | Generator |
| G | Air Compressor |
| H | Fuel Storage and Containment |
| I | Water Tanks |
| J | Miscellaneous Material Storage |

## BETHANY RESERVOIR AQUEDUCT

VERIFY SCALE
BAR IS ONE INCH ON ORIGINAL DRAWING.
0 1"

| REV | DATE | DESCRIPTION | SUB. | APPD |
|---|---|---|---|---|
| | 12/23/2021 | FINAL DRAFT BASELINE DRAWINGS | | |

DESIGNED
DRAWN
CHECKED
APPROVAL RECOMMENDED
APPROVAL BY

DELTA CONVEYANCE DESIGN & CONSTRUCTION AUTHORITY

ENGINEERING PROJECT REPORT
DELTA CONVEYANCE PROJECT
SINGLE TUNNEL - BETHANY RESERVOIR ALTERNATIVE

BETHANY RESERVOIR AQUEDUCT
SITE PLAN A

PROJECT NO. W8X97000
SHEET NO. STB-C-1101AQ
REV
SEQUENCE NO.

STB-C-1101AQ_W8X97000.dgn

PLOT DATE:2021\11\16 PLOT TIME:8:05:29 AM

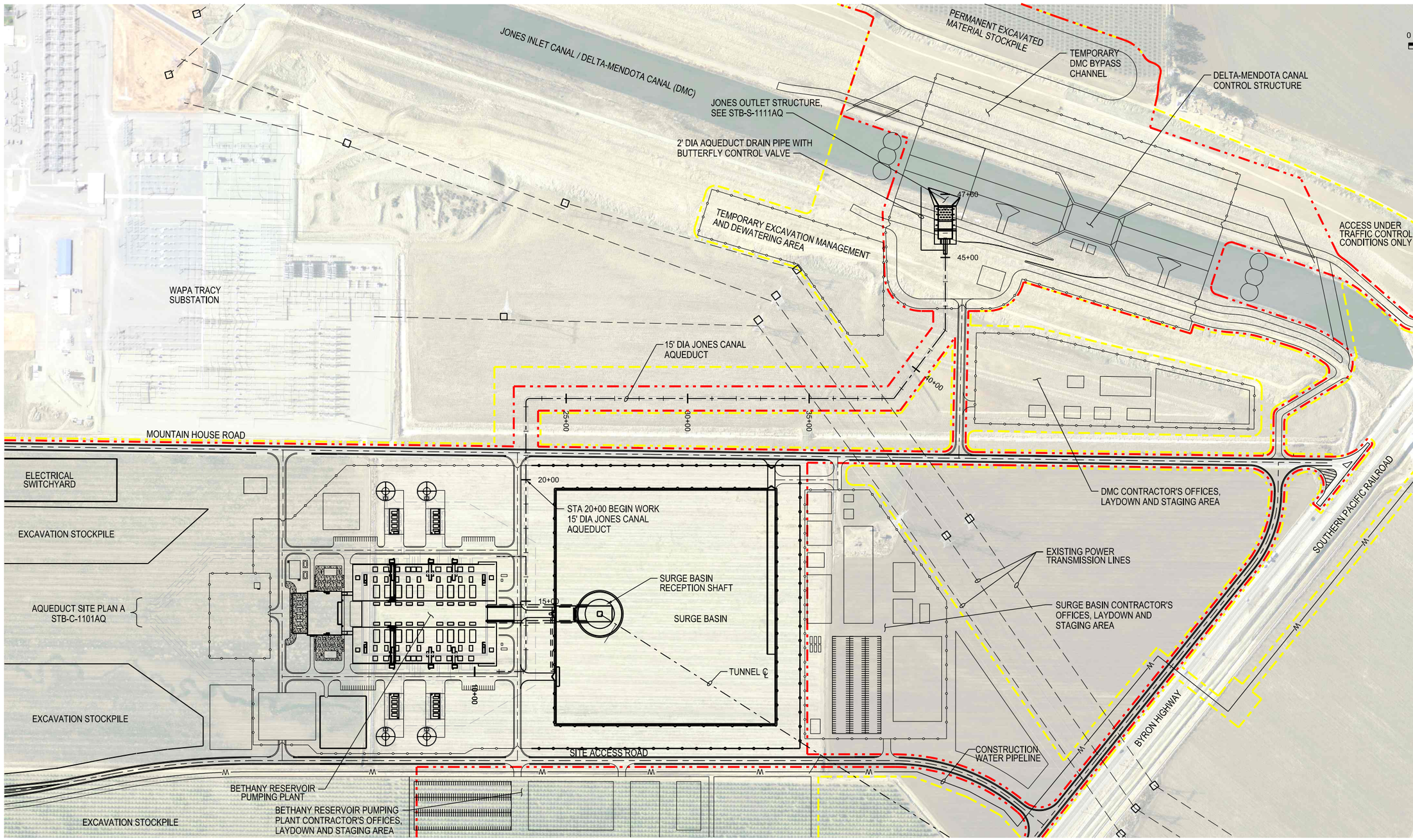


PLAN
1" = 200'

# BETHANY RESERVOIR AQUEDUCT

VERIFY SCALE
BAR IS ONE INCH ON ORIGINAL DRAWING.
0 1"

| REV | DATE | DESCRIPTION | SUB. | APPD |
|---|---|---|---|---|
| | 12/23/2021 | FINAL DRAFT BASELINE DRAWINGS | | |

DESIGNED
DRAWN
CHECKED
APPROVAL RECOMMENDED
APPROVAL BY

DELTA CONVEYANCE DESIGN & CONSTRUCTION AUTHORITY

ENGINEERING PROJECT REPORT
DELTA CONVEYANCE PROJECT
SINGLE TUNNEL - BETHANY RESERVOIR ALTERNATIVE

## JONES INLET CANAL / DMC
## AQUEDUCT SITE PLAN B (7500 CFS OPTION ONLY)

PROJECT NO. W8X97000
SHEET NO. STB-C-1102AQ
REV
SEQUENCE NO.

STB-C-1102AQ_W8X97000.dgn

PLOT DATE:11/22/2021 PLOT TIME:6:58:42 AM

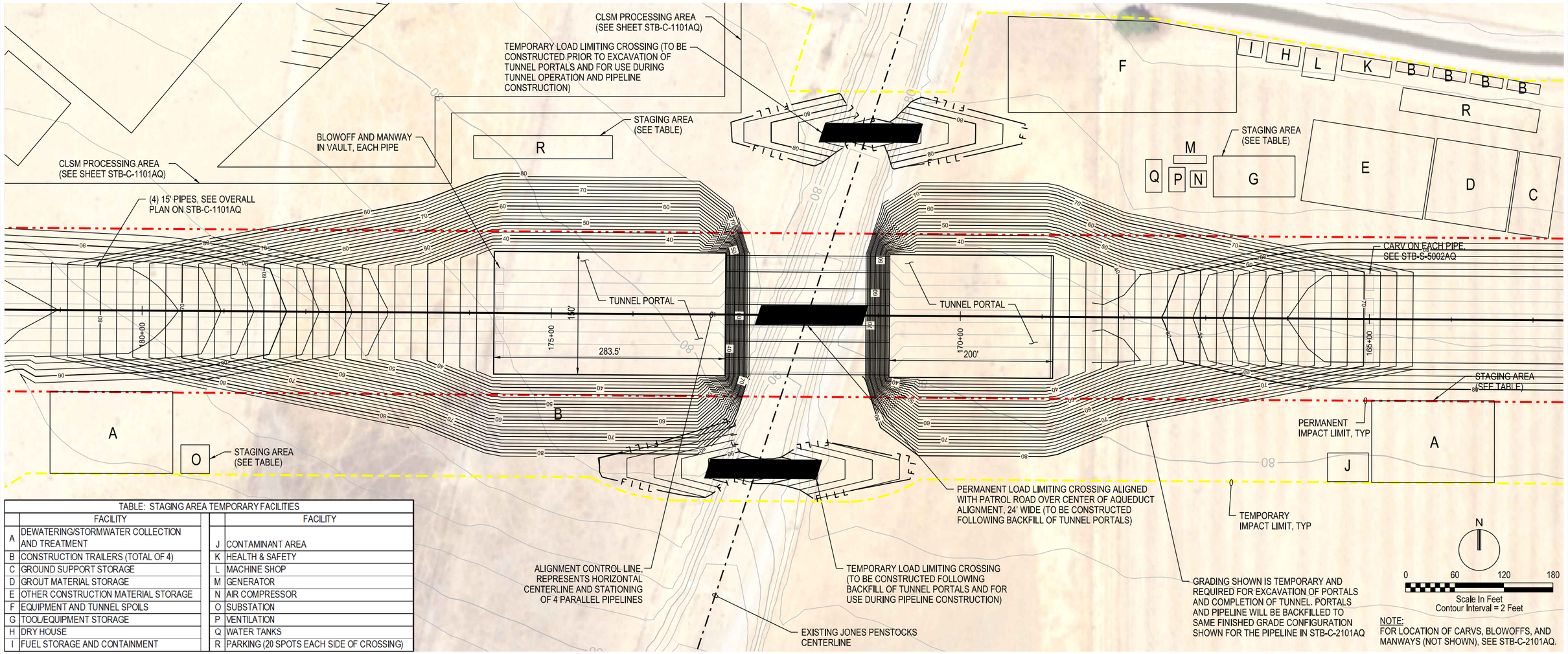


| | FACILITY | | FACILITY |
|---|---|---|---|
| A | DEWATERING/STORMWATER COLLECTION AND TREATMENT | J | CONTAMINANT AREA |
| B | CONSTRUCTION TRAILERS (TOTAL OF 4) | K | HEALTH & SAFETY |
| C | GROUND SUPPORT STORAGE | L | MACHINE SHOP |
| D | GROUT MATERIAL STORAGE | M | GENERATOR |
| E | OTHER CONSTRUCTION MATERIAL STORAGE | N | AIR COMPRESSOR |
| F | EQUIPMENT AND TUNNEL SPOILS | O | SUBSTATION |
| G | TOOL/EQUIPMENT STORAGE | P | VENTILATION |
| H | DRY HOUSE | Q | WATER TANKS |
| I | FUEL STORAGE AND CONTAINMENT | R | PARKING (20 SPOTS EACH SIDE OF CROSSING) |

TABLE: STAGING AREA TEMPORARY FACILITIES

NOTE:
FOR LOCATION OF CARVS, BLOWOFFS, AND MANWAYS (NOT SHOWN), SEE STB-C-2101AQ.

## PLAN
SCALE: 1"=60'

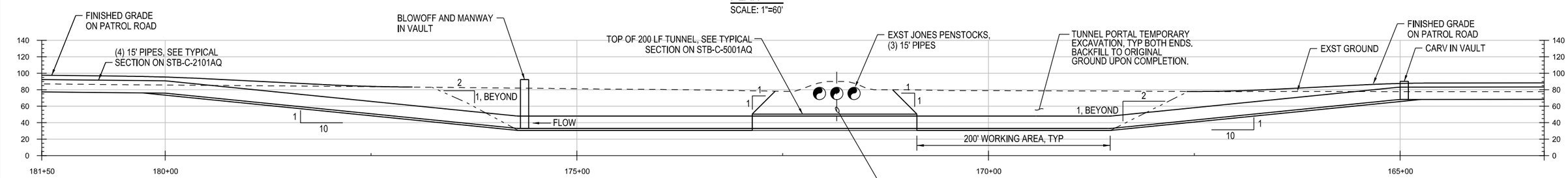


JONES PENSTOCKS CENTERLINE (AQUEDUCT DEPTH TO BE DETERMINED DURING FINAL DESIGN ONCE ACTUAL ELEVATION OF JONES PENSTOCKS IS KNOWN. TUNNEL SHOULD BE 2D = APPROXIMATELY 40' UNDER EXISTING PENSTOCKS.)

## PROFILE
SCALE: 1"=60'

VERIFY SCALE
BAR IS ONE INCH ON ORIGINAL DRAWING.
0 1"

# BETHANY RESERVOIR AQUEDUCT

| REV | DATE | DESCRIPTION | SUB. | APPD |
|---|---|---|---|---|
| | 12/23/2021 | FINAL DRAFT BASELINE DRAWINGS | | |

DESIGNED
DRAWN
CHECKED
APPROVAL RECOMMENDED
APPROVAL BY

DELTA CONVEYANCE DESIGN & CONSTRUCTION AUTHORITY

ENGINEERING PROJECT REPORT
DELTA CONVEYANCE PROJECT
SINGLE TUNNEL - BETHANY RESERVOIR ALTERNATIVE

## JONES PENSTOCK CROSSING
## TUNNEL PORTAL PLAN AND PROFILE

PROJECT NO. W8X97000
SHEET NO. STB-C-1111AQ
REV
SEQUENCE NO.

STB-C-1111AQ_W8X97000.dgn

PLOT DATE:2021\11\15 PLOT TIME:1:41:58 PM

| TABLE: STAGING AREA TEMPORARY FACILITIES | |
|---|---|
| | FACILITY |
| A | DEWATERING/STORMWATER COLLECTION AND TREATMENT |
| B | CONSTRUCTION TRAILERS |
| C | GROUND SUPPORT STORAGE |
| D | GROUT MATERIAL STORAGE |
| E | OTHER CONSTRUCTION MATERIAL STORAGE |
| F | EQUIPMENT AND TUNNEL SPOILS |
| G | TOOL/EQUIPMENT STORAGE |
| H | DRY HOUSE |
| I | FUEL STORAGE AND CONTAINMENT |
| J | CONTAMINANT AREA |
| K | HEALTH & SAFETY |
| L | MACHINE SHOP |
| M | GENERATOR |
| N | AIR COMPRESSOR |
| O | SUBSTATION |
| P | VENTILATION |
| Q | WATER TANKS |
| R | PARKING |

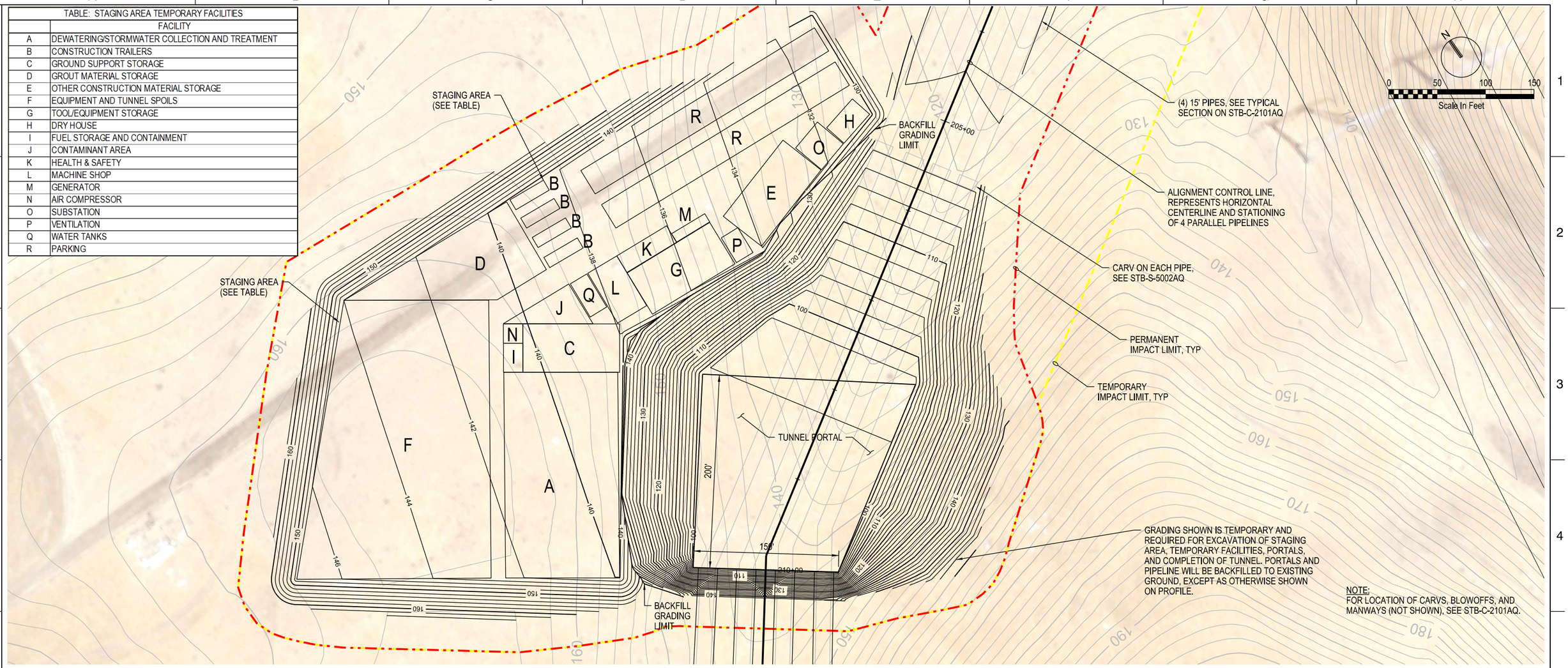


NOTE:
FOR LOCATION OF CARVS, BLOWOFFS, AND MANWAYS (NOT SHOWN), SEE STB-C-2101AQ.

PLAN
SCALE: 1"=50'

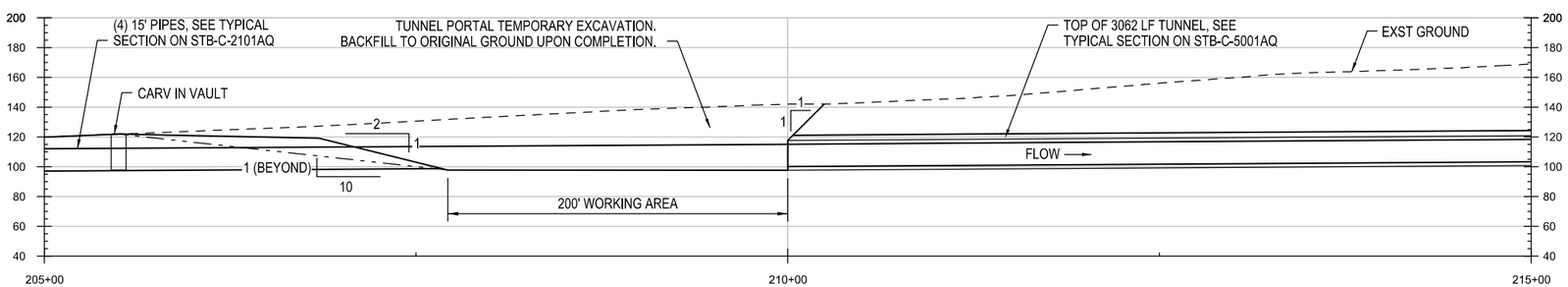


PROFILE
SCALE: 1"=50'

# BETHANY RESERVOIR AQUEDUCT

VERIFY SCALE
BAR IS ONE INCH ON ORIGINAL DRAWING.
0 1"

| REV | DATE | DESCRIPTION | SUB. | APPD |
|---|---|---|---|---|
| | 12/23/2021 | FINAL DRAFT BASELINE DRAWINGS | | |

DESIGNED | APPROVAL RECOMMENDED
DRAWN | APPROVAL BY
CHECKED

DELTA CONVEYANCE DESIGN & CONSTRUCTION AUTHORITY

ENGINEERING PROJECT REPORT
DELTA CONVEYANCE PROJECT
SINGLE TUNNEL - BETHANY RESERVOIR ALTERNATIVE

## CONSERVATION EASEMENT CROSSING TUNNEL PORTAL PLAN AND PROFILE

PROJECT NO. W8X97000
SHEET NO. STB-C-1112AQ
REV | SEQUENCE NO.

STB-C-1112AQ_W8X97000.dgn
PLOT DATE:2021\11\15 PLOT TIME:1:45:00 PM

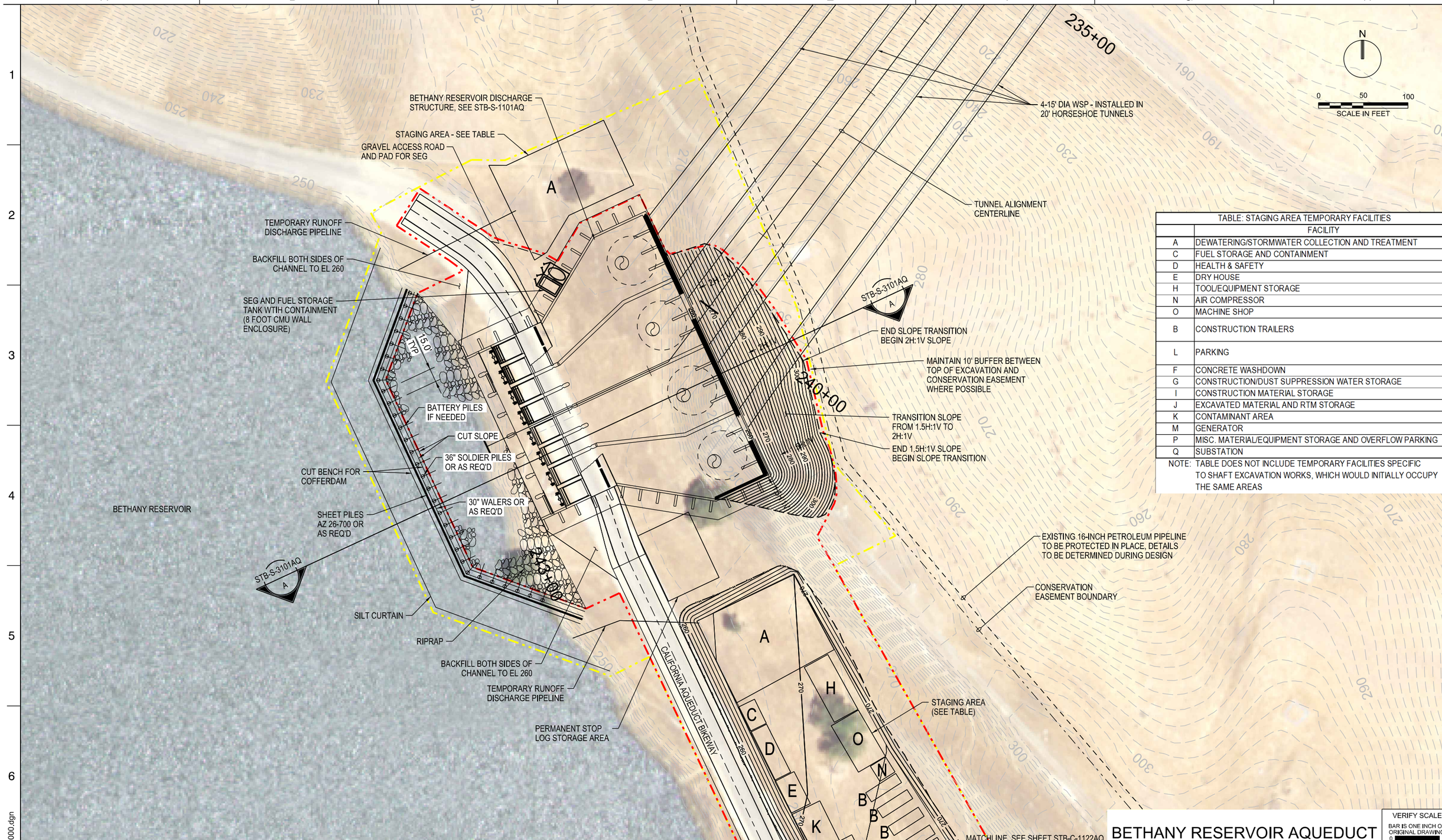


| TABLE: STAGING AREA TEMPORARY FACILITIES | |
|---|---|
| | FACILITY |
| A | DEWATERING/STORMWATER COLLECTION AND TREATMENT |
| C | FUEL STORAGE AND CONTAINMENT |
| D | HEALTH & SAFETY |
| E | DRY HOUSE |
| H | TOOL/EQUIPMENT STORAGE |
| N | AIR COMPRESSOR |
| O | MACHINE SHOP |
| B | CONSTRUCTION TRAILERS |
| L | PARKING |
| F | CONCRETE WASHDOWN |
| G | CONSTRUCTION/DUST SUPPRESSION WATER STORAGE |
| I | CONSTRUCTION MATERIAL STORAGE |
| J | EXCAVATED MATERIAL AND RTM STORAGE |
| K | CONTAMINANT AREA |
| M | GENERATOR |
| P | MISC. MATERIAL/EQUIPMENT STORAGE AND OVERFLOW PARKING |
| Q | SUBSTATION |

NOTE: TABLE DOES NOT INCLUDE TEMPORARY FACILITIES SPECIFIC TO SHAFT EXCAVATION WORKS, WHICH WOULD INITIALLY OCCUPY THE SAME AREAS

# BETHANY RESERVOIR AQUEDUCT

VERIFY SCALE
BAR IS ONE INCH ON ORIGINAL DRAWING.
0 1"

| REV | DATE | DESCRIPTION | SUB. | APPD |
|---|---|---|---|---|
| | 12/23/2021 | FINAL DRAFT BASELINE DRAWINGS | | |

DESIGNED
DRAWN
CHECKED
APPROVAL RECOMMENDED
APPROVAL BY

DCA
DELTA CONVEYANCE DESIGN & CONSTRUCTION AUTHORITY

ENGINEERING PROJECT REPORT
DELTA CONVEYANCE PROJECT
SINGLE TUNNEL - BETHANY RESERVOIR ALTERNATIVE

## SITE PLAN A
## BETHANY RESERVOIR DISCHARGE STRUCTURE

PROJECT NO. W8X97000
SHEET NO. STB-C-1121AQ
REV
SEQUENCE NO.

STB-C-1121AQ_W8X97000.dgn

PLOT DATE:2021\11\15 PLOT TIME:1:47:00 PM

| TABLE: STAGING AREA TEMPORARY FACILITIES | |
|---|---|
| | FACILITY |
| A | DEWATERING/STORMWATER COLLECTION AND TREATMENT |
| C | FUEL STORAGE AND CONTAINMENT |
| D | HEALTH & SAFETY |
| E | DRY HOUSE |
| H | TOOL/EQUIPMENT STORAGE |
| N | AIR COMPRESSOR |
| O | MACHINE SHOP |
| B | CONSTRUCTION TRAILERS |
| L | PARKING |
| F | CONCRETE WASHDOWN |
| G | CONSTRUCTION/DUST SUPPRESSION WATER STORAGE |
| I | CONSTRUCTION MATERIAL STORAGE |
| J | EXCAVATED MATERIAL AND RTM STORAGE |
| K | CONTAMINANT AREA |
| M | GENERATOR |
| P | MISC. MATERIAL/EQUIPMENT STORAGE AND OVERFLOW PARKING |
| Q | SUBSTATION |

NOTE: TABLE DOES NOT INCLUDE TEMPORARY FACILITIES SPECIFIC TO SHAFT EXCAVATION WORKS, WHICH WOULD INITIALLY OCCUPY THE SAME AREAS

# BETHANY RESERVOIR AQUEDUCT

VERIFY SCALE
BAR IS ONE INCH ON ORIGINAL DRAWING.
0 1"

| REV | DATE | DESCRIPTION | SUB. | APPD |
|---|---|---|---|---|
| | 12/23/2021 | FINAL DRAFT BASELINE DRAWINGS | | |

DESIGNED
DRAWN
CHECKED
APPROVAL RECOMMENDED
APPROVAL BY

DELTA CONVEYANCE DESIGN & CONSTRUCTION AUTHORITY

ENGINEERING PROJECT REPORT
DELTA CONVEYANCE PROJECT
SINGLE TUNNEL - BETHANY RESERVOIR ALTERNATIVE

## SITE PLAN B
## BETHANY RESERVOIR DISCHARGE STRUCTURE

PROJECT NO. W8X97000
SHEET NO. STB-C-1122AQ
REV
SEQUENCE NO.

STB-C-1122AQ_W8X97000.dgn

PLOT DATE:2021\11\15 PLOT TIME:1:52:20 PM

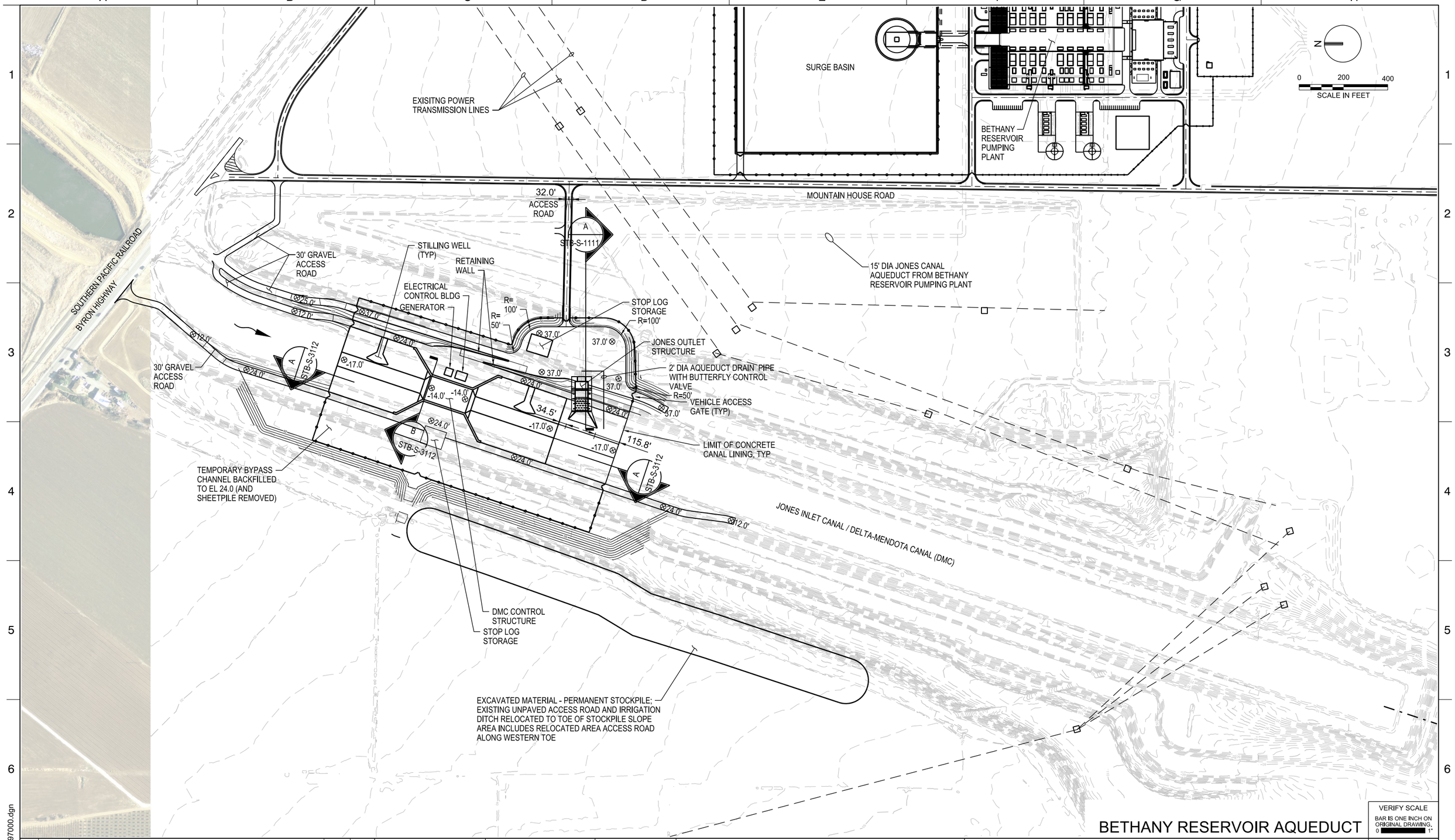


BETHANY RESERVOIR AQUEDUCT

VERIFY SCALE
BAR IS ONE INCH ON ORIGINAL DRAWING.
0 1"

| REV | DATE | DESCRIPTION | SUB. | APPD |
|---|---|---|---|---|
| | 12/23/2021 | FINAL DRAFT BASELINE DRAWINGS | | |

DESIGNED
DRAWN
CHECKED
APPROVAL RECOMMENDED
APPROVAL BY

DELTA CONVEYANCE DESIGN & CONSTRUCTION AUTHORITY

ENGINEERING PROJECT REPORT
DELTA CONVEYANCE PROJECT
SINGLE TUNNEL - BETHANY RESERVOIR ALTERNATIVE

# JONES CANAL OUTLET FINISHED SITE PLAN

PROJECT NO. W8X97000
SHEET NO. STB-C-1132AQ
REV
SEQUENCE NO.

STB-C-1132AQ_W8X97000.dgn

PLOT DATE:11/22/2021 PLOT TIME:5:58:52 AM

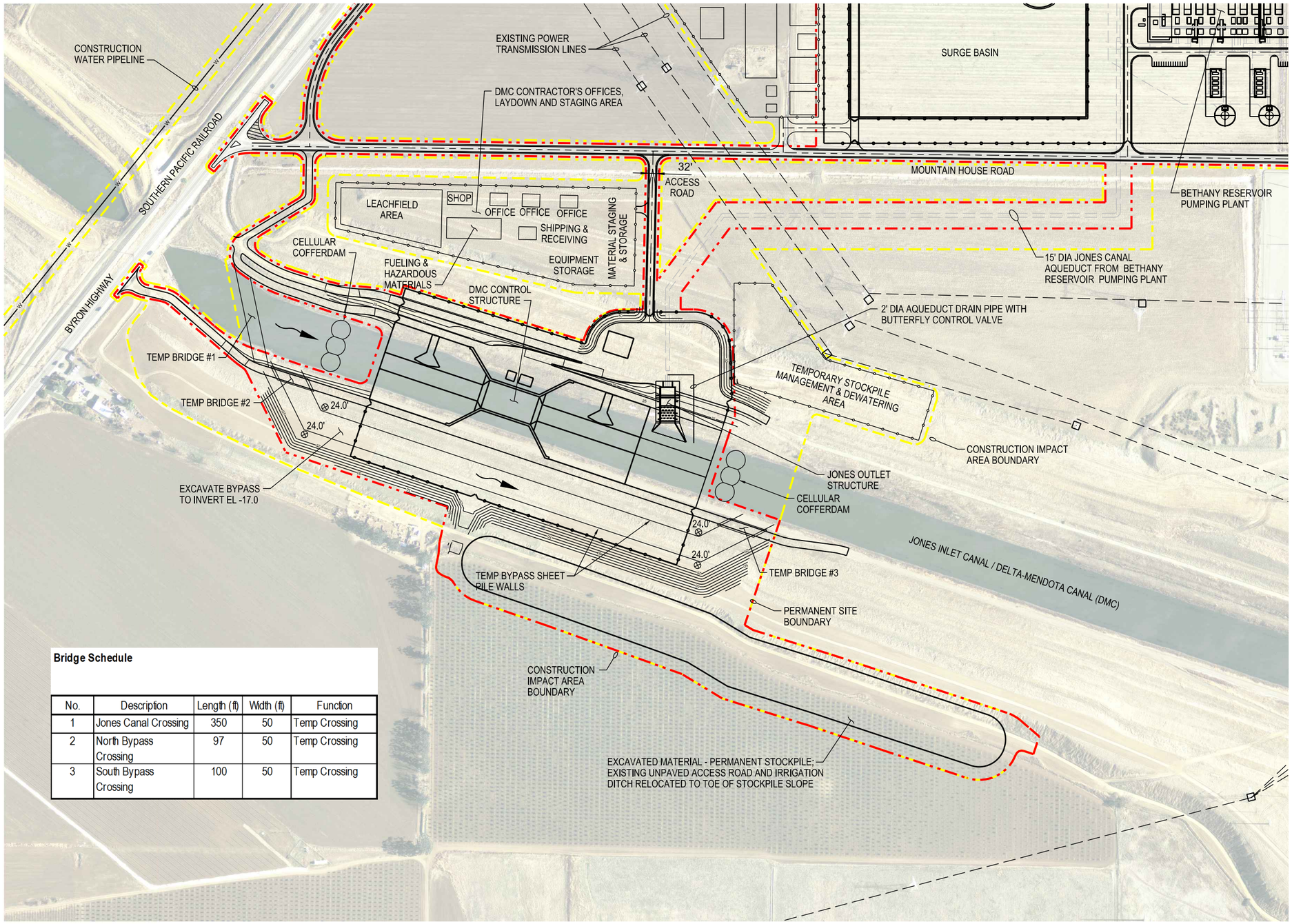


**Bridge Schedule**

| No. | Description | Length (ft) | Width (ft) | Function |
|---|---|---|---|---|
| 1 | Jones Canal Crossing | 350 | 50 | Temp Crossing |
| 2 | North Bypass Crossing | 97 | 50 | Temp Crossing |
| 3 | South Bypass Crossing | 100 | 50 | Temp Crossing |

# BETHANY RESERVOIR AQUEDUCT

VERIFY SCALE
BAR IS ONE INCH ON ORIGINAL DRAWING.
0 1"

| REV | DATE | DESCRIPTION | SUB. | APPD |
|---|---|---|---|---|
| | 12/23/2021 | FINAL DRAFT BASELINE DRAWINGS | | |

DESIGNED
DRAWN
CHECKED
APPROVAL RECOMMENDED
APPROVAL BY

DELTA CONVEYANCE DESIGN & CONSTRUCTION AUTHORITY

ENGINEERING PROJECT REPORT
DELTA CONVEYANCE PROJECT
SINGLE TUNNEL - BETHANY RESERVOIR ALTERNATIVE

## JONES CANAL OUTLET CONSTRUCTION SITE PLAN

PROJECT NO. W8X97000
SHEET NO. STB-C-1133AQ
REV
SEQUENCE NO.

STB-C-1133AQ_W8X97000.dgn

PLOT DATE:2021\12\17 PLOT TIME:7:11:27 AM

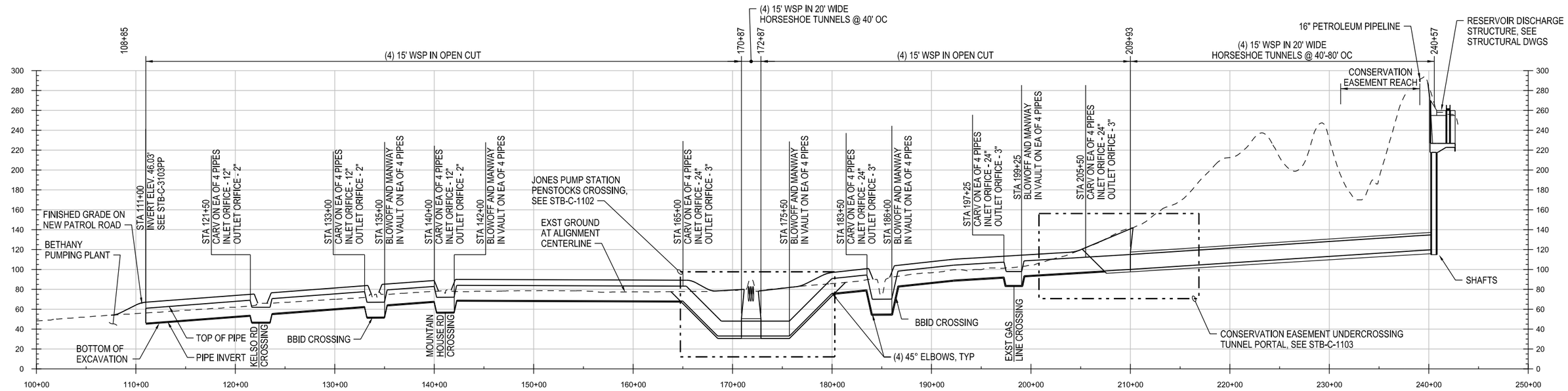


## PROFILE

HORZ: 1"=500'
VERT: 1"=50'

NOTES:

1. AQUEDUCT DEPTH AT CROSSINGS (ROADS, BBID CANALS, JONES PENSTOCKS, EXISTING GAS LINE) TO BE DETERMINED DURING DESIGN.

2. DRAINAGE ACROSS AQUEDUCT AREA TO BE DETERMINED DURING FINAL DESIGN. NATURAL DRAINAGE WILL BE PRESERVED.

**AQ PIPELINE QUANTITY & TRENCH DIMENSIONS**

| Optional Design Capacity (cfs) | Number of Aqueduct Pipelines | Trench Width (Bottom of Trench) (ft) | Permanent Disturbed Width (ft) | Note |
|---|---|---|---|---|
| 7,500 | 4 | 115 | 200 | Trench dimensions and number of pipelines same as 6,000 cfs case between pumping plant and reservoir because additional capacity is delivered to DMC in separate pipeline |
| 6,000 | 4 | 115 | 200 | |
| 4,500 | 3 | 85 | 170 | |
| 3,000 | 2 | 55 | 140 | |

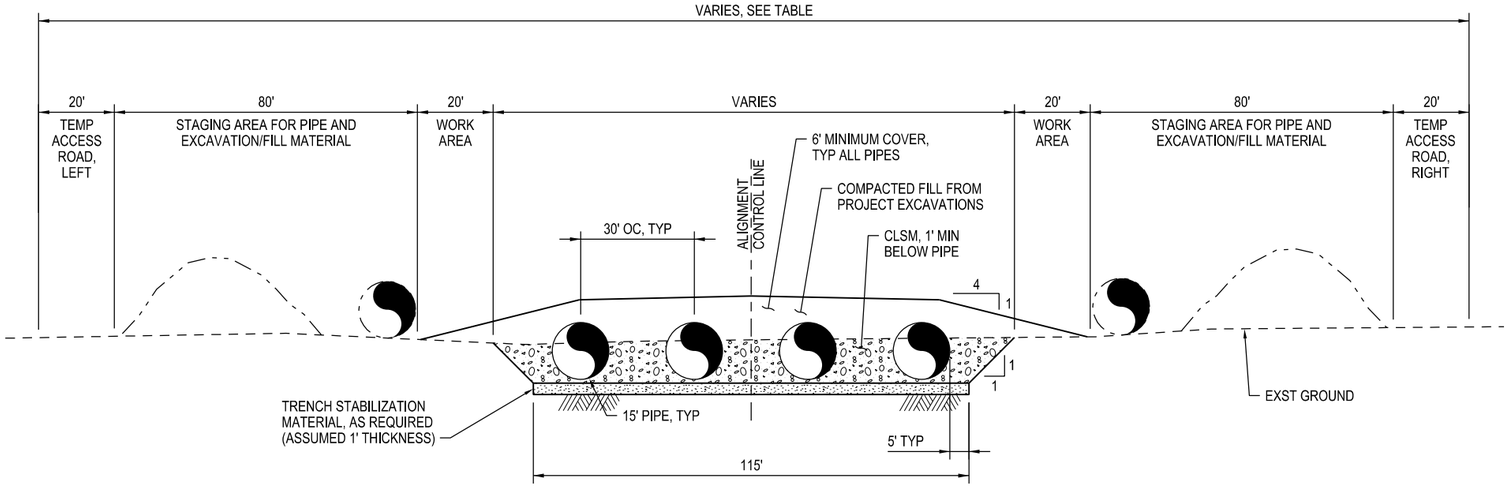


TYPICAL CONSTRUCTION PHASE TRENCH SECTION FOR OPEN CUT REACHES OF AQUEDUCT ALIGNMENT

1"=20'

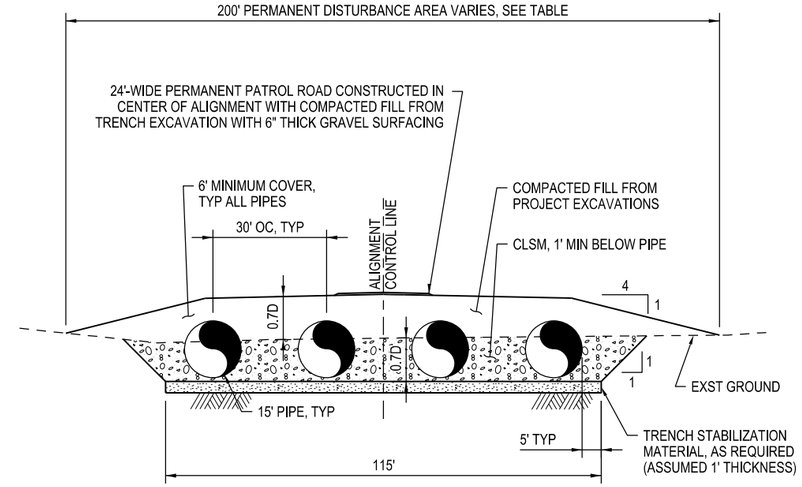


TYPICAL FINISHED CONDITION TRENCH SECTION FOR OPEN CUT REACHES OF AQUEDUCT ALIGNMENT

1"=20'

# BETHANY RESERVOIR AQUEDUCT

VERIFY SCALE
BAR IS ONE INCH ON ORIGINAL DRAWING.
0 1"

| REV | DATE | DESCRIPTION | SUB. | APPD |
|---|---|---|---|---|
| | 12/23/2021 | FINAL DRAFT BASELINE DRAWINGS | | |

DESIGNED
DRAWN
CHECKED
APPROVAL RECOMMENDED
APPROVAL BY

DELTA CONVEYANCE DESIGN & CONSTRUCTION AUTHORITY

ENGINEERING PROJECT REPORT
DELTA CONVEYANCE PROJECT
SINGLE TUNNEL - BETHANY RESERVOIR ALTERNATIVE

## BETHANY RESERVOIR AQUEDUCT PROFILE AND SECTIONS

PROJECT NO. W8X97000
SHEET NO. STB-C-2101AQ
REV
SEQUENCE NO.

STB-C-2101AQ_W8X97000.dgn

PLOT DATE:2021\11\15 PLOT TIME:2:08:48 PM

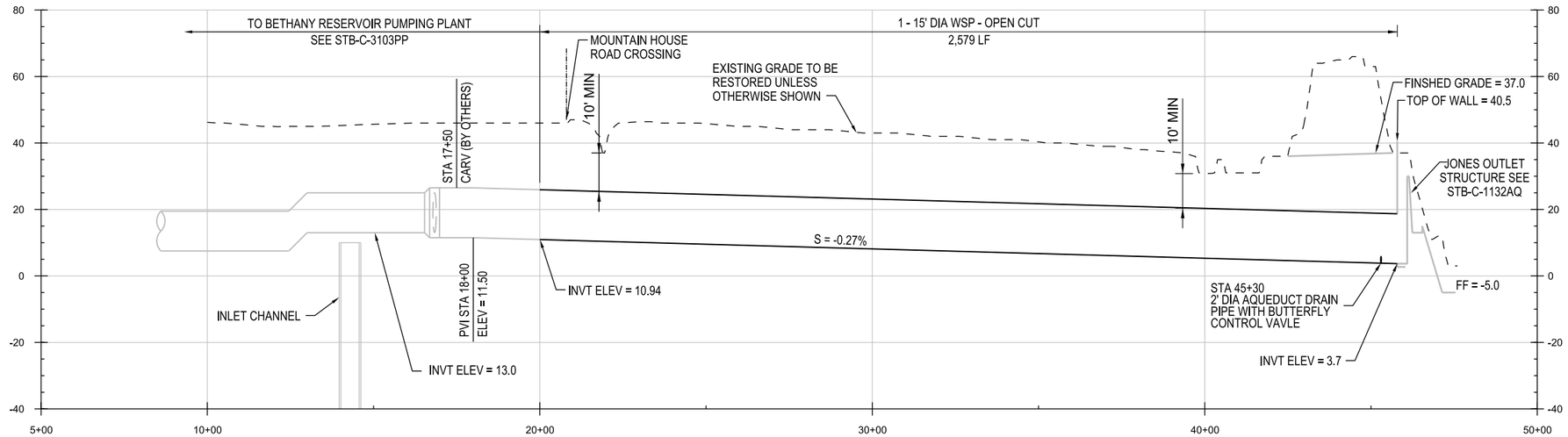


## PROFILE

HORIZ: 1"=200'
VERT: 1"=20'

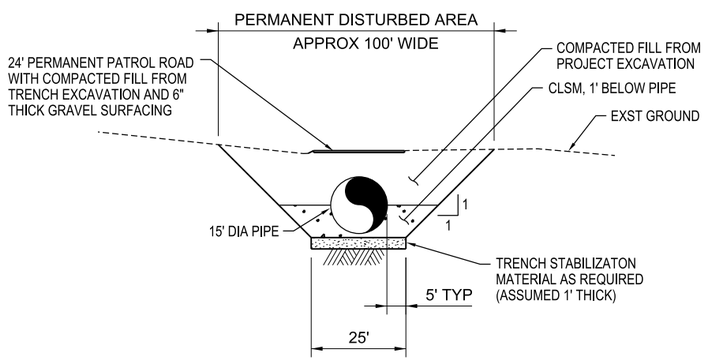


## TYPICAL FINISHED CONDITION TRENCH SECTION FOR OPEN CUT REACHES OF AQUEDUCT ALIGNMENT

1"=20'

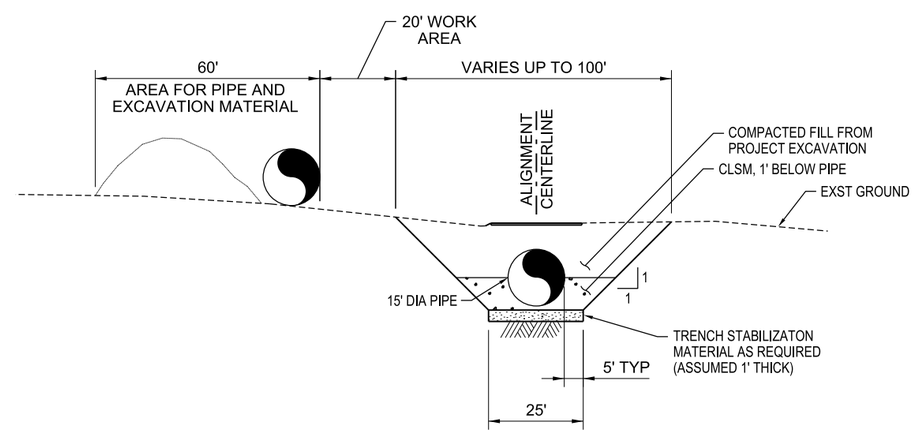


## TYPICAL CONSTRUCTION PHASE TRENCH SECTION FOR OPEN CUT OF AQUEDUCT ALIGNMENT

1"=20'

# BETHANY RESERVOIR AQUEDUCT

VERIFY SCALE
BAR IS ONE INCH ON ORIGINAL DRAWING.
0 1"

| REV | DATE | DESCRIPTION | SUB. | APPD |
|---|---|---|---|---|
| | 12/23/2021 | FINAL DRAFT BASELINE DRAWINGS | | |

DESIGNED | APPROVAL RECOMMENDED
DRAWN | APPROVAL BY
CHECKED

DELTA CONVEYANCE DESIGN & CONSTRUCTION AUTHORITY

ENGINEERING PROJECT REPORT
DELTA CONVEYANCE PROJECT
SINGLE TUNNEL - BETHANY RESERVOIR ALTERNATIVE

## JONES CANAL AQUEDUCT PROFILE AND SECTIONS

PROJECT NO. W8X97000
SHEET NO. STB-C-2102AQ
REV | SEQUENCE NO.

STB-C-2102AQ_W8X97000.dgn

PLOT DATE:11/22/2021 PLOT TIME:5:59:03 AM

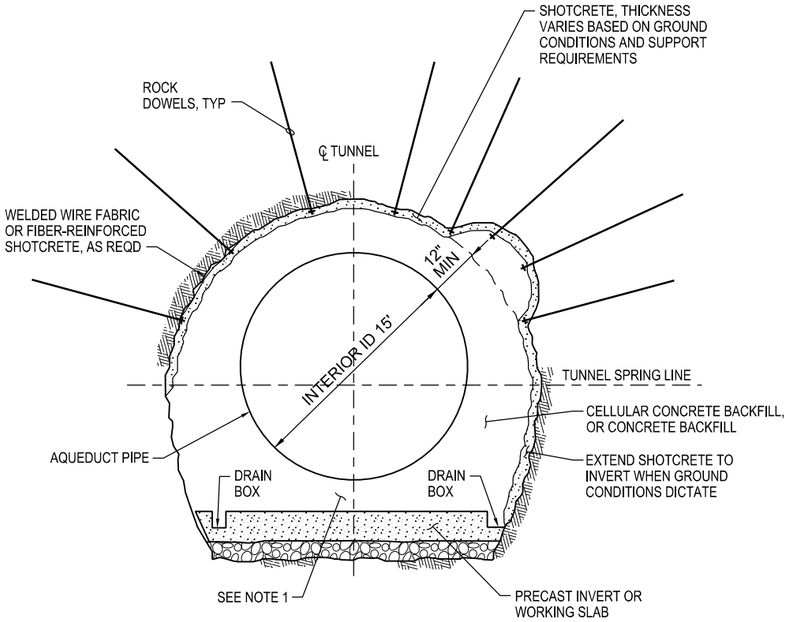


1 INITIAL GROUND SUPPORT WITH ROCK DOWELS AND SHOTCRETE
NTS

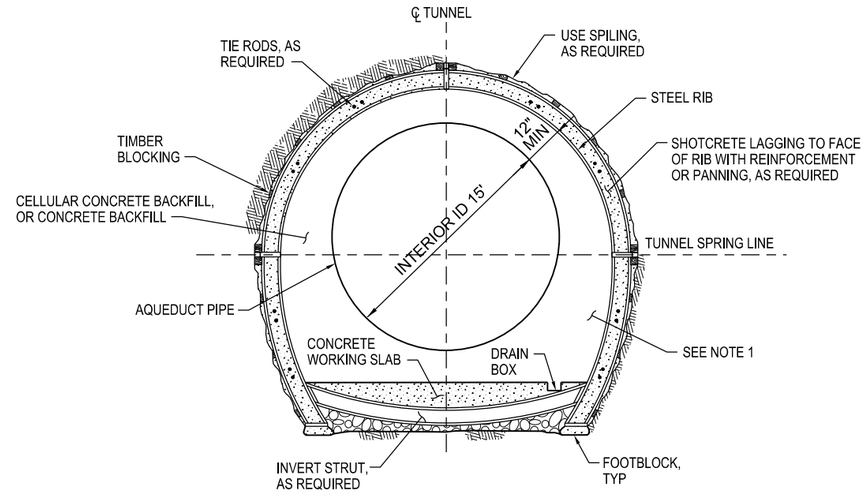


2 INITIAL GROUND SUPPORT WITH STEEL RIBS AND SHOTCRETE
NTS

NOTES:
1. FOR CLARITY, THE BLOCKING OF THE PIPE TO PREVENT FLOTATION IS NOT SHOWN, BUT WILL BE REQUIRED.
2. IF GROUNDWATER AND GROUND CONDITIONS WARRANT, SPECIAL MEASURES SUCH AS PIPE CANOPY, SPILING, BREASTING, GROUND IMPROVEMENT AND/OR DEWATERING WILL BE INSTALLED IN ADVANCE OF THE TUNNELING OPERATIONS TO MINIMIZE GROUND LOSS AND EXCESSIVE WATER INTRUSIONS.

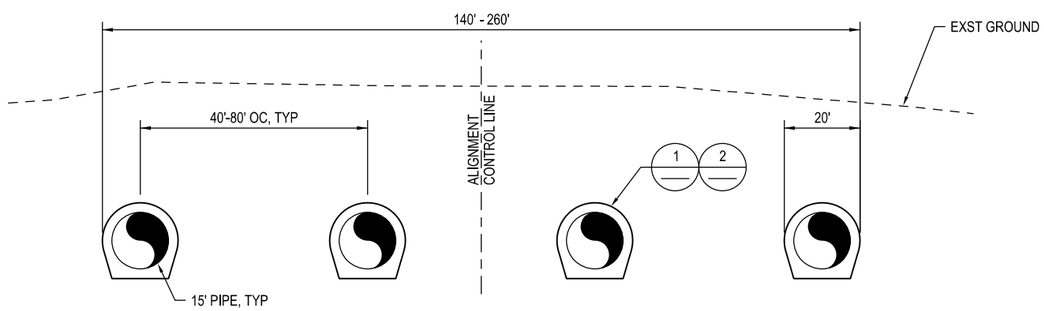


A TYPICAL TUNNEL SECTION FOR CONSERVATION EASEMENT UNDERCROSSING
NTS

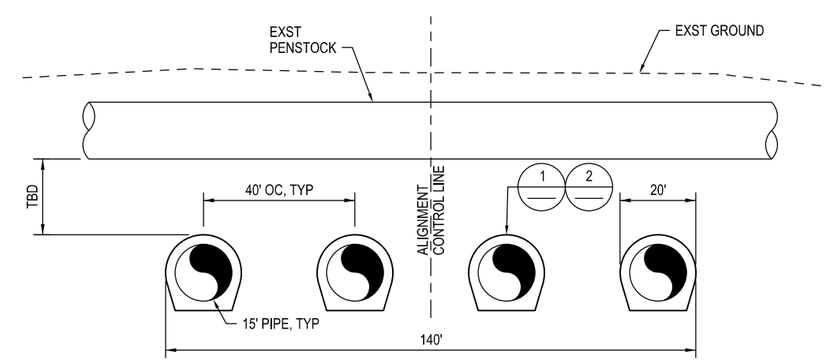


B TYPICAL TUNNEL SECTION FOR JONES PENSTOCK UNDERCROSSING
NTS

VERIFY SCALE
BAR IS ONE INCH ON ORIGINAL DRAWING.
0 1"

# BETHANY RESERVOIR AQUEDUCT

| REV | DATE | DESCRIPTION | SUB. | APPD |
|---|---|---|---|---|
| | 12/23/2021 | FINAL DRAFT BASELINE DRAWINGS | | |

DESIGNED | APPROVAL RECOMMENDED
DRAWN | APPROVAL BY
CHECKED

DELTA CONVEYANCE DESIGN & CONSTRUCTION AUTHORITY

ENGINEERING PROJECT REPORT
DELTA CONVEYANCE PROJECT
SINGLE TUNNEL - BETHANY RESERVOIR ALTERNATIVE

## AQUEDUCT TUNNEL DETAILS

PROJECT NO. W8X97000
SHEET NO. STB-C-5001AQ
REV | SEQUENCE NO.

STB-C-5001AQ_W8X97000.dgn
PLOT DATE:2021\11\15 PLOT TIME:2:10:47 PM

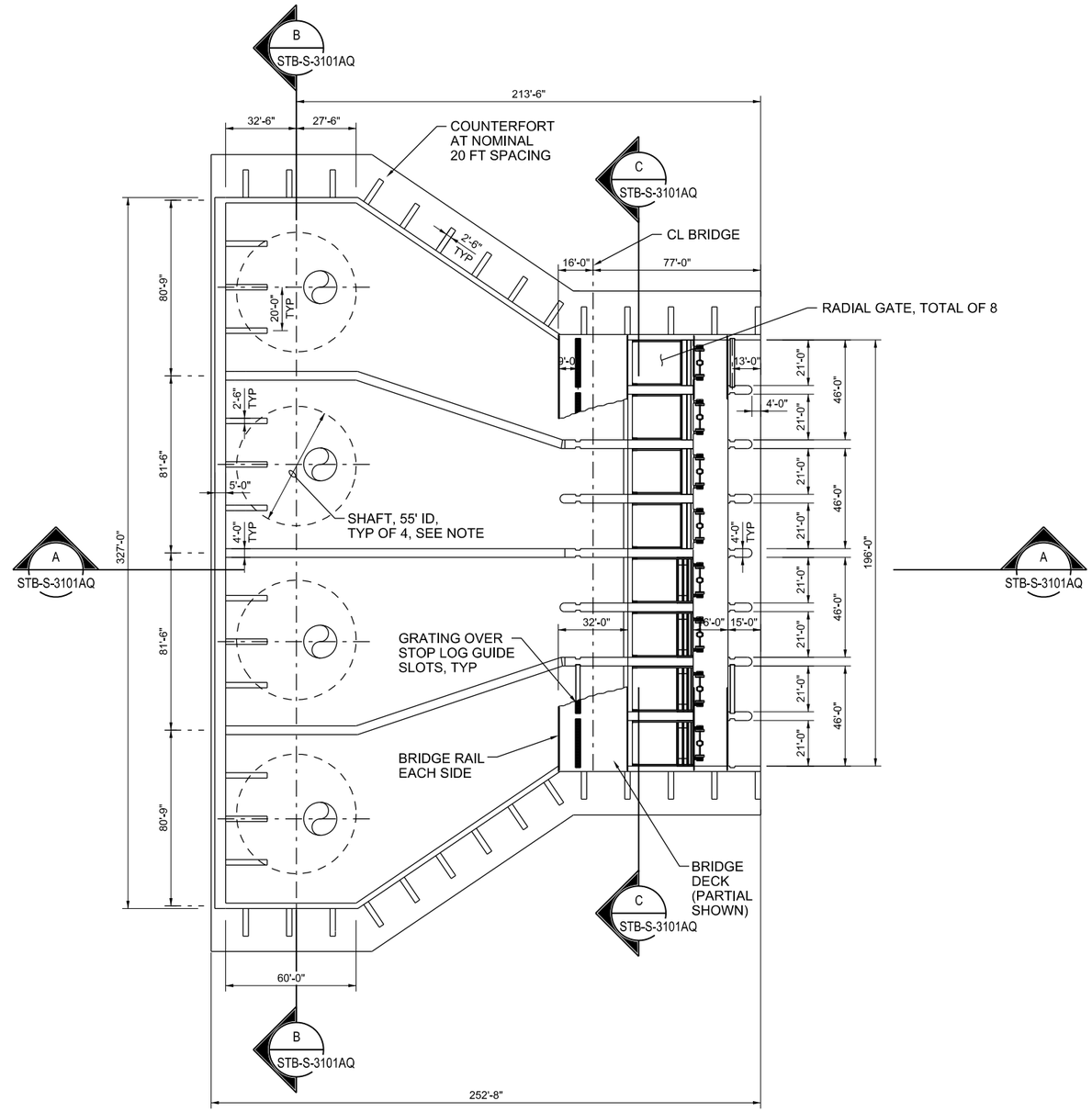


NOTE:
SHAFT SIZE DEPENDENT ON ELBOW CONFIGURATION,
ACTUAL SIZE TO BE DETERMINED DURING FINAL DESIGN.

## DISCHARGE STRUCTURE PLAN

1/32"=1'-0"

BETHANY RESERVOIR AQUEDUCT

VERIFY SCALE
BAR IS ONE INCH ON ORIGINAL DRAWING.
0 1"

| REV | DATE | DESCRIPTION | SUB. | APPD |
|---|---|---|---|---|
| | 12/23/2021 | FINAL DRAFT BASELINE DRAWINGS | | |

DESIGNED
DRAWN
CHECKED
APPROVAL RECOMMENDED
APPROVAL BY

DELTA CONVEYANCE DESIGN & CONSTRUCTION AUTHORITY

ENGINEERING PROJECT REPORT
DELTA CONVEYANCE PROJECT
SINGLE TUNNEL - BETHANY RESERVOIR ALTERNATIVE

STRUCTURAL PLAN
BETHANY RESERVOIR DISCHARGE STRUCTURE

PROJECT NO. W8X97000
SHEET NO. STB-S-1101AQ
REV
SEQUENCE NO.

STB-S-1101AQ_W8X97000.dgn

PLOT DATE:2021\11\15 PLOT TIME:2:18:54 PM

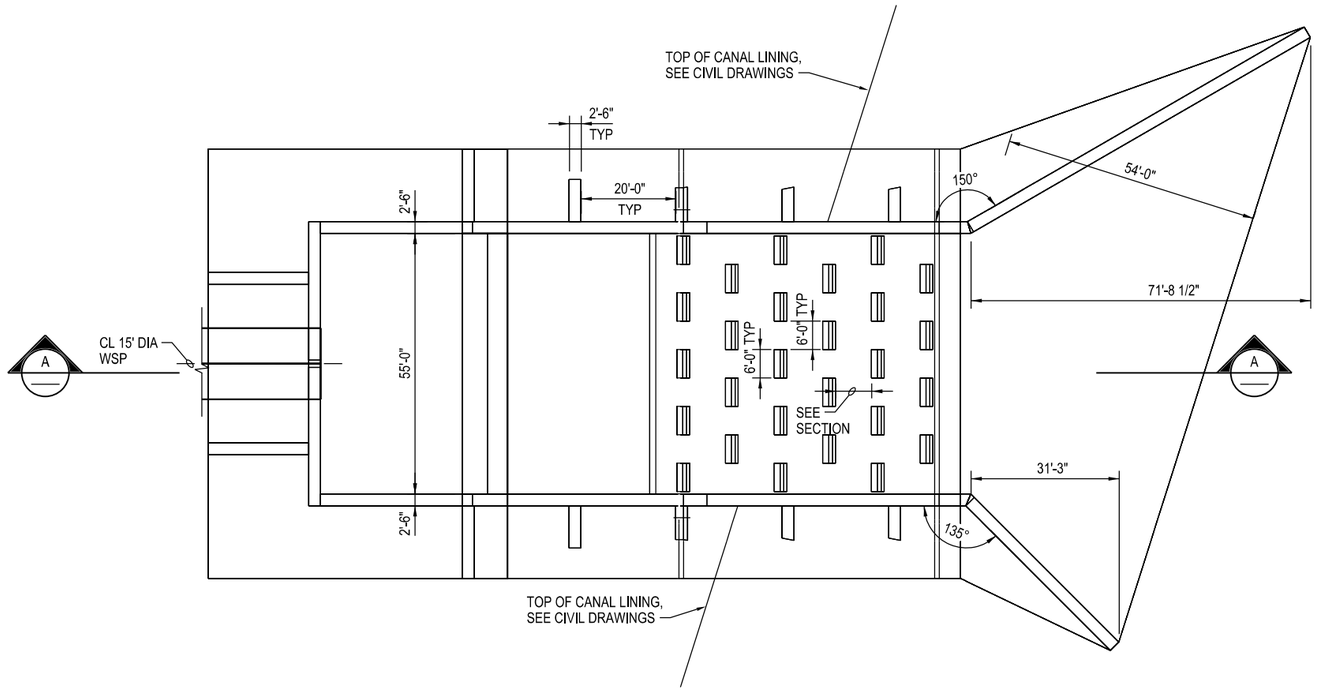


N PLAN
1/16"=1'-0"

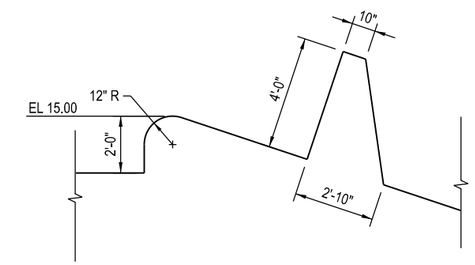


1 TYPICAL BAFFLE DETAIL
3/8"=1'-0"

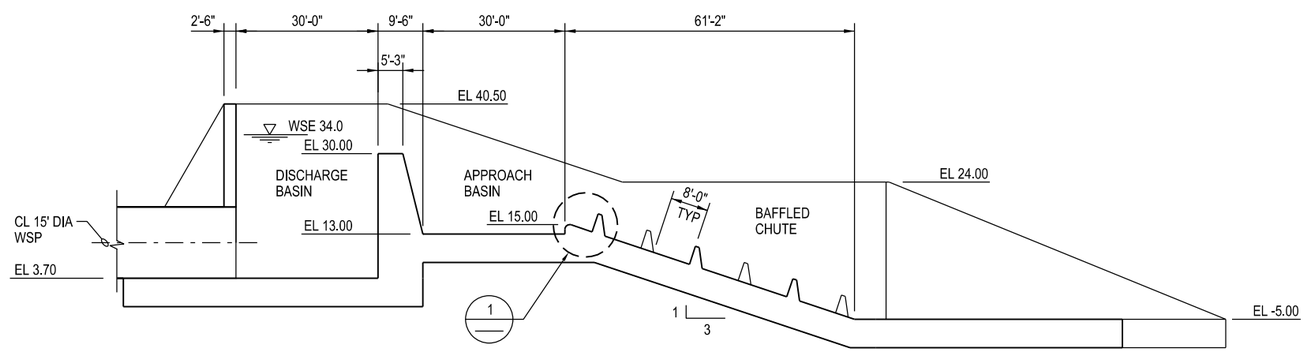


A SECTION
1/16"=1'-0"

NOTE:

1. RAILING SHALL BE PROVIDED AROUND TOP OF STRUCTURE. SEE SECTIONS.

VERIFY SCALE
BAR IS ONE INCH ON ORIGINAL DRAWING.
0 1"

# BETHANY RESERVOIR AQUEDUCT

| REV | DATE | DESCRIPTION | SUB. | APPD |
|---|---|---|---|---|
| | 12/23/2021 | FINAL DRAFT BASELINE DRAWINGS | | |

DESIGNED: H HENRIKSON
DRAWN: B CLEGG
CHECKED:
APPROVAL RECOMMENDED:
APPROVAL BY:

DELTA CONVEYANCE DESIGN & CONSTRUCTION AUTHORITY

ENGINEERING PROJECT REPORT
DELTA CONVEYANCE PROJECT
SINGLE TUNNEL - BETHANY RESERVOIR ALTERNATIVE

## JONES OUTLET STRUCTURE PLAN

PROJECT NO. W8X97000
SHEET NO. STB-S-1111AQ
REV | SEQUENCE NO.

STB-S-1111AQ_W8X97000.dgn

PLOT DATE:2021\11\15 PLOT TIME:2:20:30 PM

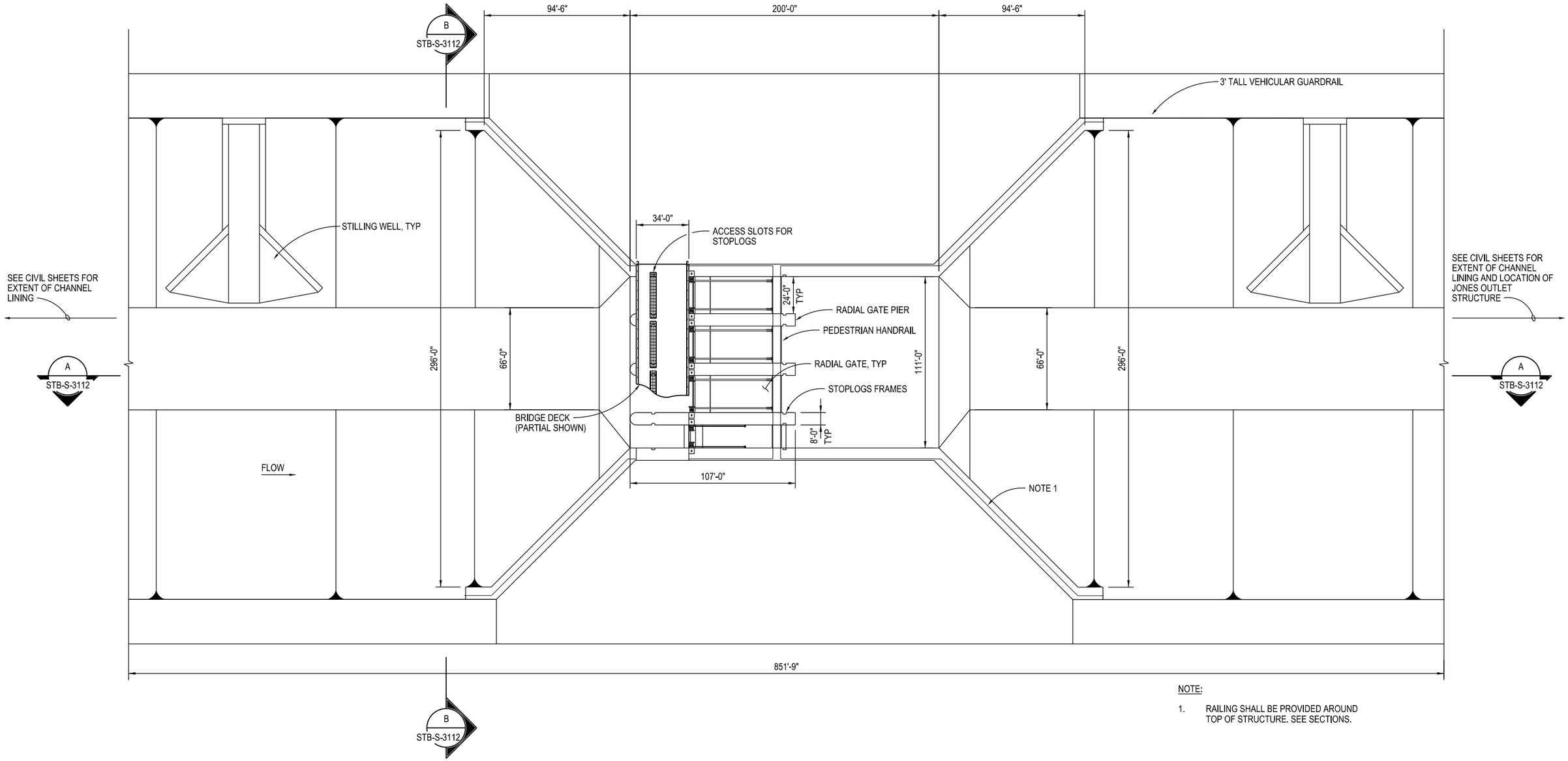


NOTE:

1. RAILING SHALL BE PROVIDED AROUND TOP OF STRUCTURE. SEE SECTIONS.

PLAN
1/32"=1'-0"

# BETHANY RESERVOIR AQUEDUCT

| REV | DATE | DESCRIPTION | SUB. | APPD |
|---|---|---|---|---|
| | 12/23/2021 | FINAL DRAFT BASELINE DRAWINGS | | |

DESIGNED
DRAWN J SMITH
CHECKED
APPROVAL RECOMMENDED
APPROVAL BY

DELTA CONVEYANCE DESIGN & CONSTRUCTION AUTHORITY

ENGINEERING PROJECT REPORT
DELTA CONVEYANCE PROJECT
SINGLE TUNNEL - BETHANY RESERVOIR ALTERNATIVE

## DELTA-MENDOTA CANAL CONTROL STRUCTURE PLAN

VERIFY SCALE
BAR IS ONE INCH ON ORIGINAL DRAWING.
0 1"

PROJECT NO. W8X97000
SHEET NO. STB-S-1112AQ
REV
SEQUENCE NO.

STB-S-1112AQ_W8X97000.dgn

PLOT DATE:2021\11\15 PLOT TIME:2:22:00 PM

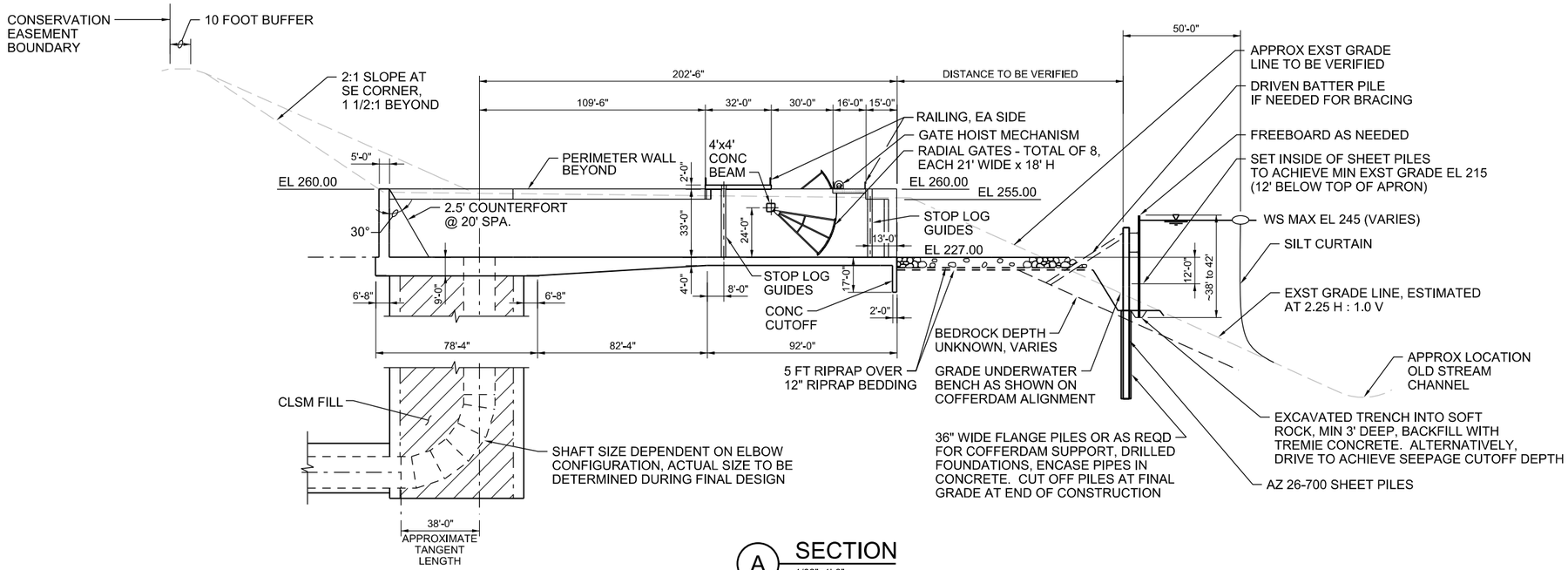


A SECTION
1/32"=1'-0"
STB-S-1101AQ
STB-C-1121AQ

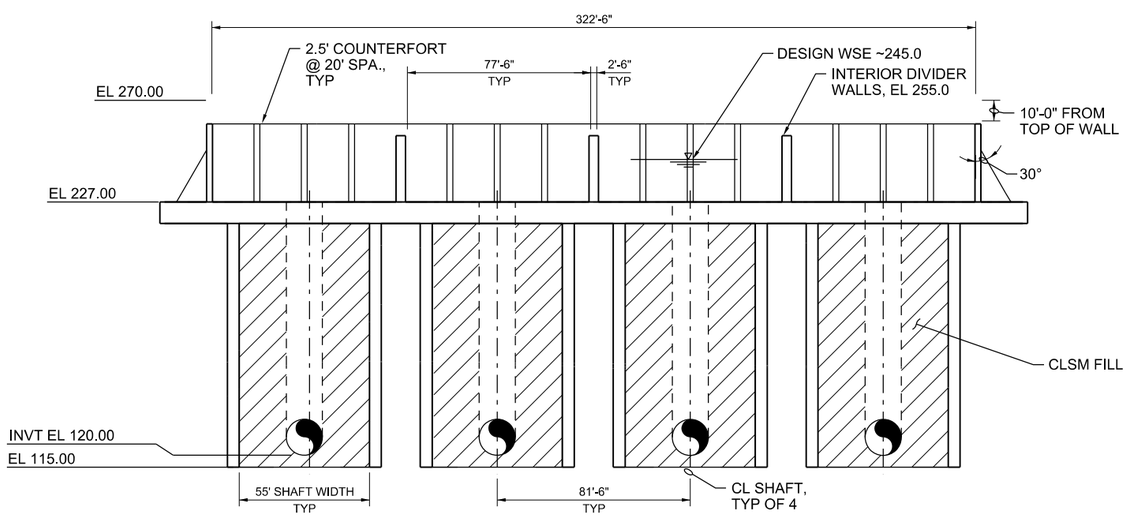


B SECTION
1/32"=1'-0"
STB-S-1101AQ

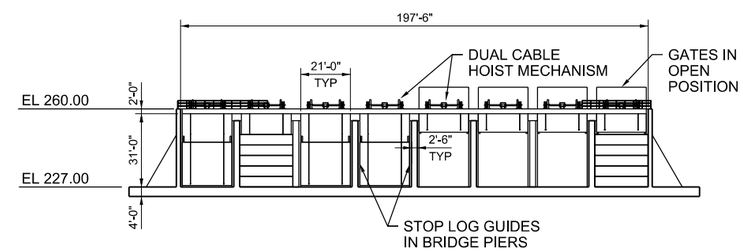


C SECTION
1/32"=1'-0"
STB-S-1101AQ

BETHANY RESERVOIR AQUEDUCT

| REV | DATE | DESCRIPTION | SUB. | APPD |
|---|---|---|---|---|
| | 12/23/2021 | FINAL DRAFT BASELINE DRAWINGS | | |

DESIGNED
DRAWN J SMITH
CHECKED
APPROVAL RECOMMENDED
APPROVAL BY

DELTA CONVEYANCE DESIGN & CONSTRUCTION AUTHORITY

ENGINEERING PROJECT REPORT
DELTA CONVEYANCE PROJECT
SINGLE TUNNEL - BETHANY RESERVOIR ALTERNATIVE

DELTA-MENDOTA CANAL CONTROL STRUCTURE
STRUCTURAL SECTIONS

VERIFY SCALE
BAR IS ONE INCH ON ORIGINAL DRAWING.
0 1"

PROJECT NO. W8X97000
SHEET NO. STB-S-3101AQ
REV
SEQUENCE NO.

STB-S-1112AQ_W8X97000.dgn

PLOT DATE:2021\11\15 PLOT TIME:2:52:33 PM

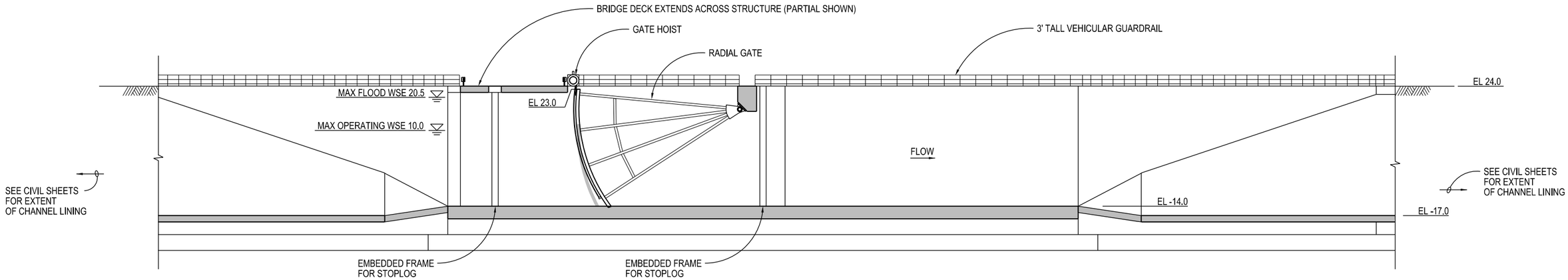


A SECTION
1/16"=1'-0"
STB-S-1112AQ

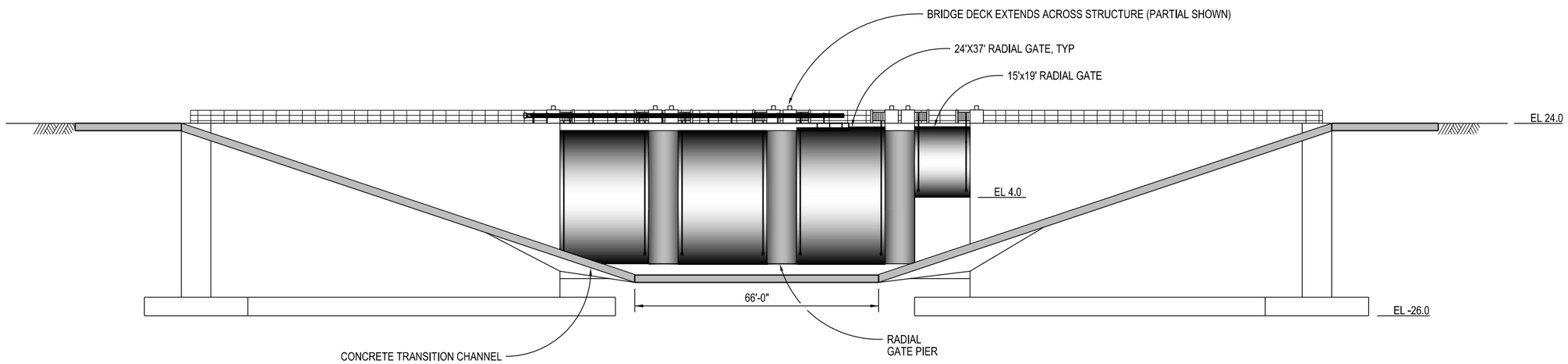


B SECTION
1/16"=1'-0"
STB-S-1112AQ

VERIFY SCALE
BAR IS ONE INCH ON ORIGINAL DRAWING.
0 1"

# BETHANY RESERVOIR AQUEDUCT

| REV | DATE | DESCRIPTION | SUB. | APPD |
|---|---|---|---|---|
| | 12/23/2021 | FINAL DRAFT BASELINE DRAWINGS | | |

DESIGNED
DRAWN J SMITH
CHECKED
APPROVAL RECOMMENDED
APPROVAL BY

DELTA CONVEYANCE DESIGN & CONSTRUCTION AUTHORITY

ENGINEERING PROJECT REPORT
DELTA CONVEYANCE PROJECT
SINGLE TUNNEL - BETHANY RESERVOIR ALTERNATIVE

## DELTA-MENDOTA CANAL CONTROL STRUCTURE SECTIONS

PROJECT NO.
SHEET NO. STB -S-3112AQ
REV
SEQUENCE NO.

STB-S-3112AQ_W8X97000.dgn

PLOT DATE:2021\11\15 PLOT TIME:2:54:53 PM

NOTES:

1. SEE PLAN AND PROFILE DRAWINGS FOR PIPE CENTERLINE ELEVATION, EXISTING GRADE, AND FINISHED GRADE.

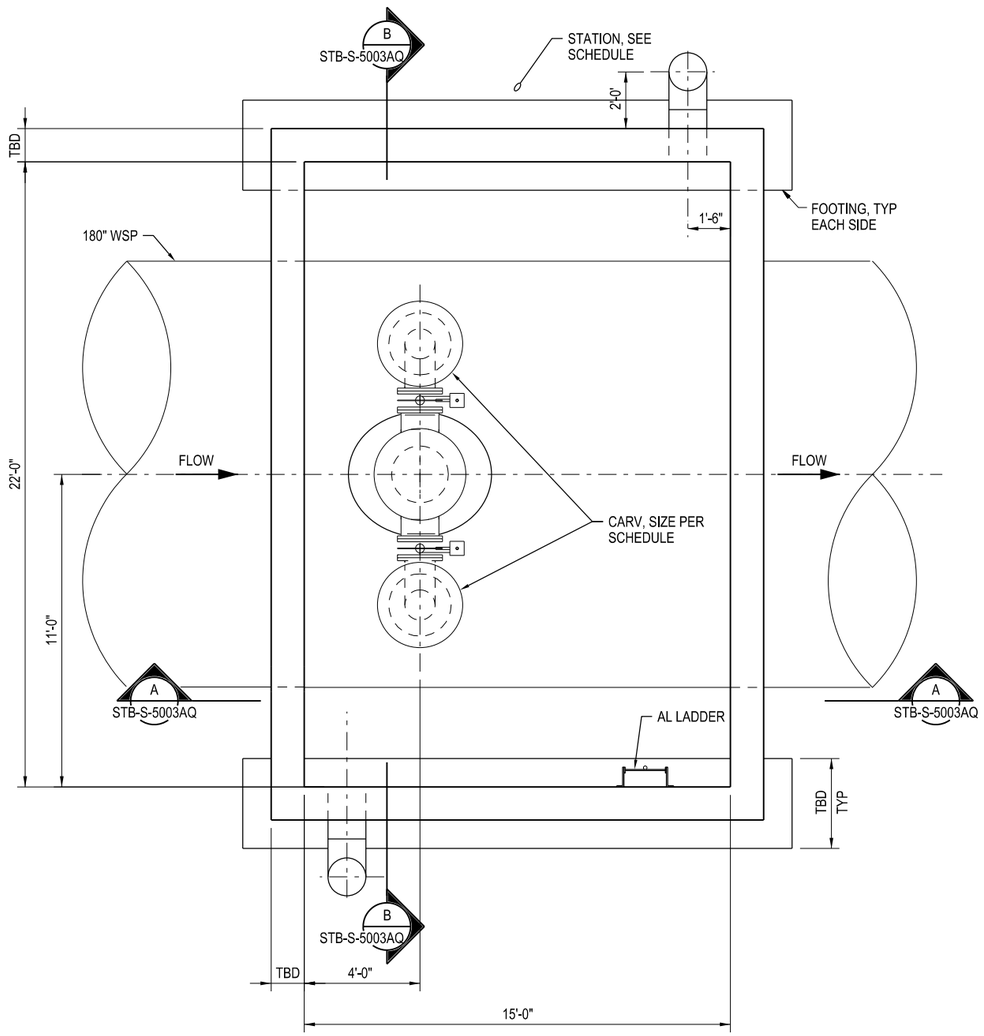


PLAN
3/8"=1'-0"

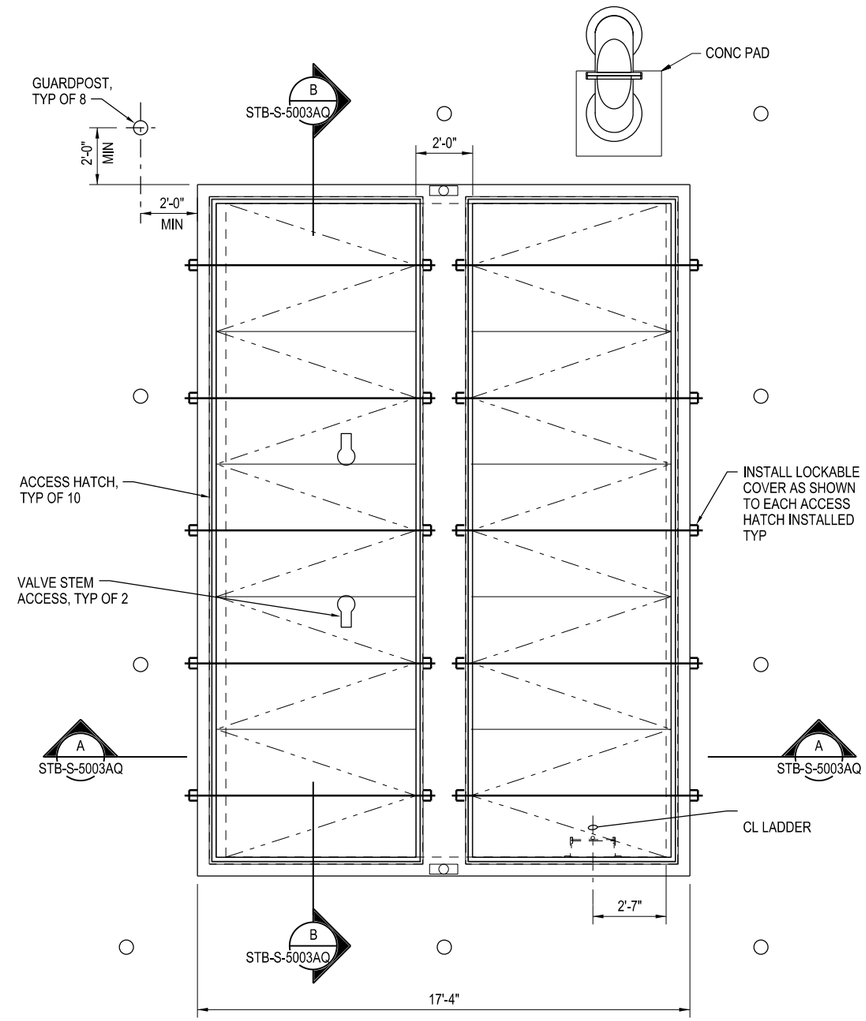


ROOF PLAN
3/8"=1'-0"

# BETHANY RESERVOIR AQUEDUCT

VERIFY SCALE
BAR IS ONE INCH ON ORIGINAL DRAWING.
0 1"

| REV | DATE | DESCRIPTION | SUB. | APPD |
|---|---|---|---|---|
| | 12/23/2021 | FINAL DRAFT BASELINE DRAWINGS | | |

DESIGNED
DRAWN
CHECKED
APPROVAL RECOMMENDED
APPROVAL BY

DELTA CONVEYANCE DESIGN & CONSTRUCTION AUTHORITY

ENGINEERING PROJECT REPORT
DELTA CONVEYANCE PROJECT
SINGLE TUNNEL - BETHANY RESERVOIR ALTERNATIVE

## CARV VAULT DETAILS

PROJECT NO. W8X97000
SHEET NO. STB-S-5002AQ
REV
SEQUENCE NO.

STB-S-5002AQ_W8X97000.dgn

PLOT DATE:2021\11\15 PLOT TIME:2:12:34 PM

| CARV SCHEDULE | | |
|---|---|---|
| STATION | INLET ORIFICE SIZE (IN) | OUTLET ORIFICE SIZE (IN) |
| 121+50 | 12 | 2 |
| 133+00 | 12 | 2 |
| 140+00 | 12 | 2 |
| 165+00 | 24 | 3 |
| 183+50 | 24 | 3 |
| 197+25 | 24 | 3 |
| 205+50 | 24 | 3 |

NOTES:

1. SEE PLAN AND PROFILE DRAWINGS FOR PIPE CENTERLINE ELEVATION, EXISTING GRADE, AND FINISHED GRADE.

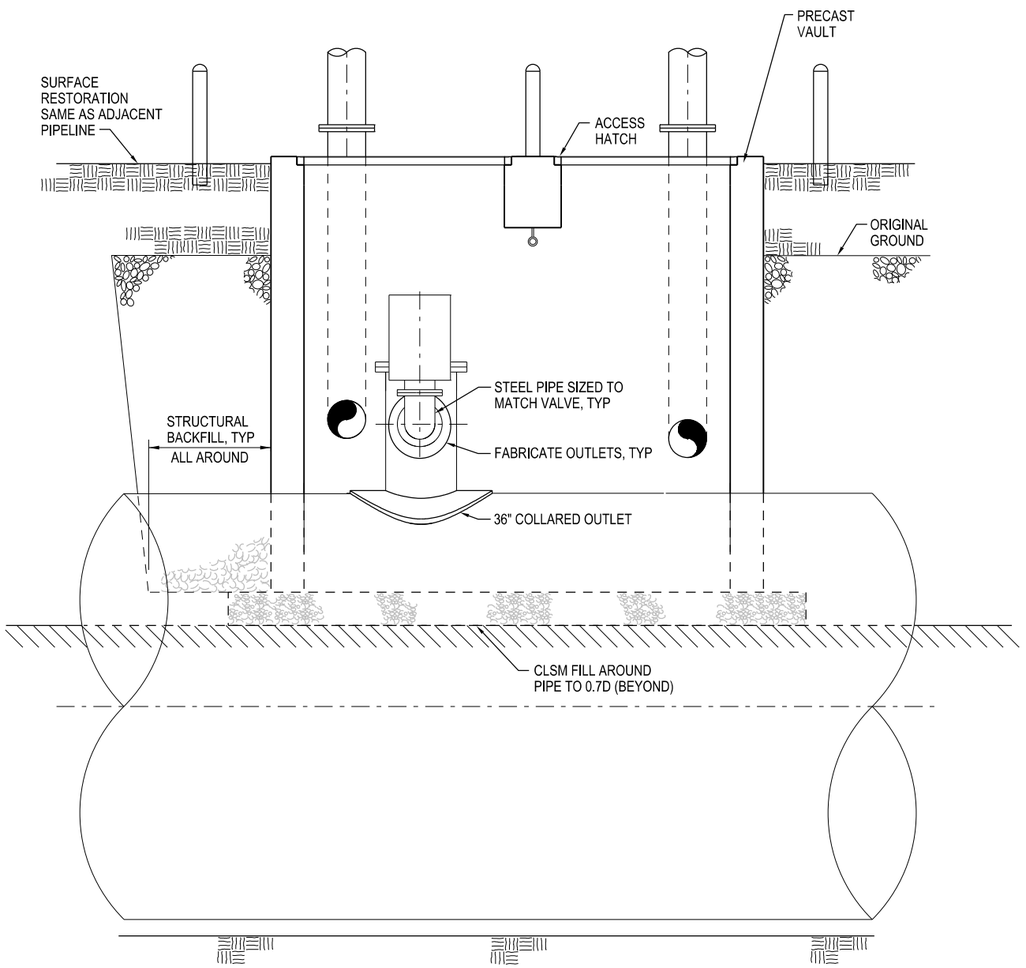


NOTE:
SUMPS/DRAINS NOT SHOWN

A SECTION
3/8"=1'-0"
STB-S-5002AQ

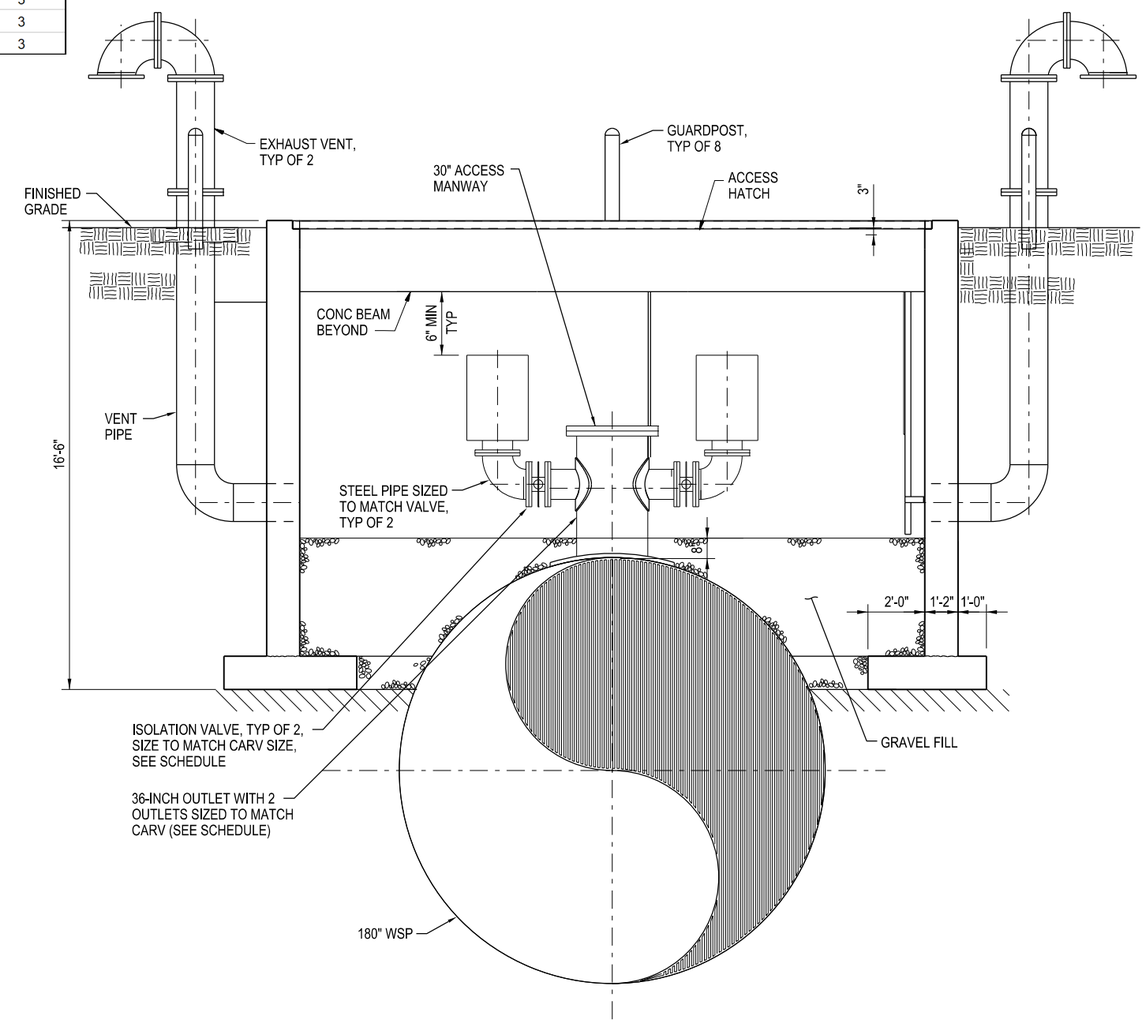


B SECTION
3/8"=1'-0"
STB-S-5002AQ

# BETHANY RESERVOIR AQUEDUCT

VERIFY SCALE
BAR IS ONE INCH ON ORIGINAL DRAWING.
0 1"

| REV | DATE | DESCRIPTION | SUB. | APPD |
|---|---|---|---|---|
| | 12/23/2021 | FINAL DRAFT BASELINE DRAWINGS | | |

DESIGNED
DRAWN
CHECKED
APPROVAL RECOMMENDED
APPROVAL BY

DELTA CONVEYANCE DESIGN & CONSTRUCTION AUTHORITY

ENGINEERING PROJECT REPORT
DELTA CONVEYANCE PROJECT
SINGLE TUNNEL - BETHANY RESERVOIR ALTERNATIVE

## CARV VAULT DETAILS

PROJECT NO. W8X97000
SHEET NO. STB-S-5003AQ
REV
SEQUENCE NO.

STB-S-5003AQ_W8X97000.dgn

PLOT DATE:2021\11\15 PLOT TIME:2:15:46 PM