NOTES:

1. SITE PLAN FOR AQUEDUCT SECTION FROM BETHANY RESERVOIR PUMPING PLANT TO THE BETHANY RESERVOIR NOT SHOWN. SEE BETHANY RESERVOIR AQUEDUCT DRAWINGS FOR DETAILS.

PLAN
1"=7000'

TUNNELS AND SHAFTS

VERIFY SCALE
BAR IS ONE INCH ON ORIGINAL DRAWING.
0 1"

REV	DATE	DESCRIPTION	SUB.	APPD
	12/23/2021	FINAL DRAFT BASELINE DRAWINGS		

DESIGNED: MARTIN ELLIS
DRAWN: RUSSELL TORADO
CHECKED: STEVE DUBNEWYCH
APPROVAL RECOMMENDED
APPROVAL BY

DELTA CONVEYANCE DESIGN & CONSTRUCTION AUTHORITY

ENGINEERING PROJECT REPORT
DELTA CONVEYANCE PROJECT
SINGLE TUNNEL - BETHANY RESERVOIR ALTERNATIVE

OVERALL SITE MAP

PROJECT NO. W8X97000
SHEET NO. STB-G-0010TN
REV
SEQUENCE NO.

STB-G-0010TN_W8X97000.dgn

PLOT DATE:12/13/2021 PLOT TIME:10:30:21 AM

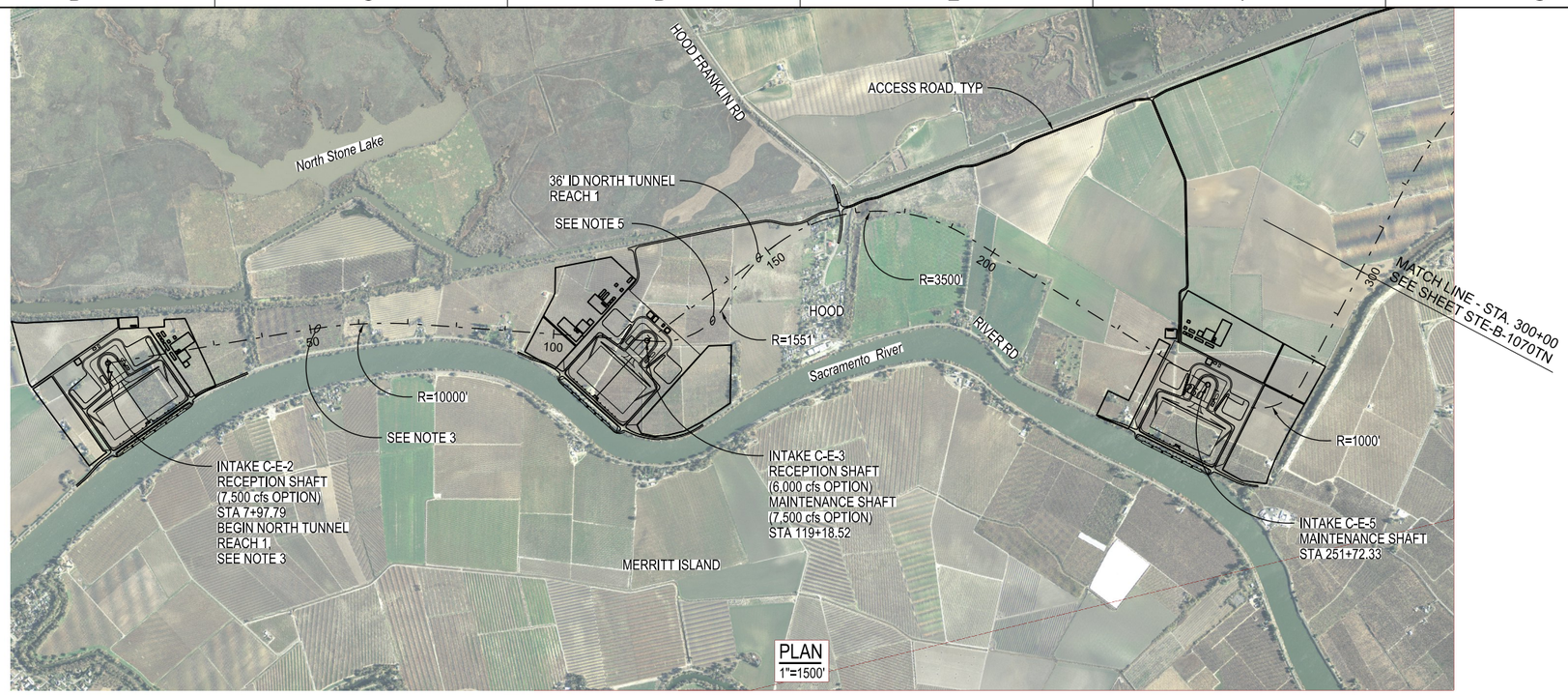

PLAN
1"=1500'

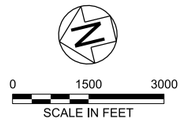

NOTES:

1. ALT 36' ID TUNNEL SHOWN FOR 6,000 cfs.
2. TOPOGRAPHY DATA IS BASED ON USGS NATIONAL ELEVATION DATASET (NED). DATA IS FOR CONCEPTUAL USE ONLY.
3. INTAKE C-E-2 AND TUNNEL BETWEEN STA 13+00.64 AND 124+13.90 SHOWN ONLY FOR 7,500 cfs OPTION.
4. SEE SHAFT SITE PLANS FOR DISTURBANCE LIMITS.
5. CURVED SECTION TO BE USED FOR 7,500 cfs OPTION ONLY, LENGTH NOT REFLECTED IN PROFILE BELOW.

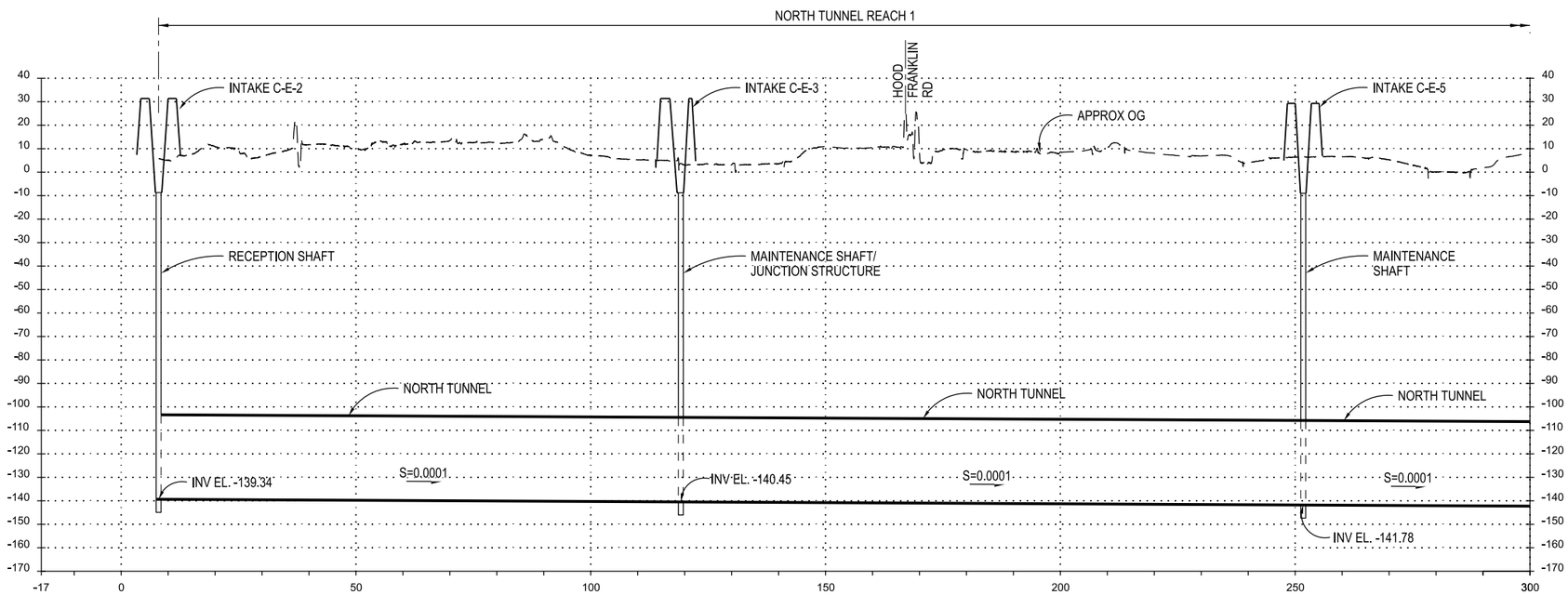

PROFILE
VERTICAL EXAGGERATION = x50

TUNNELS AND SHAFTS

VERIFY SCALE
BAR IS ONE INCH ON ORIGINAL DRAWING.
0 1"

REV	DATE	DESCRIPTION	SUB.	APPD
	12/23/2021	FINAL DRAFT BASELINE DRAWINGS		

DESIGNED: MARTIN ELLIS
DRAWN: RUSSELL TORADO
CHECKED: STEVE DUBNEWYCH
APPROVAL RECOMMENDED
APPROVAL BY

DELTA CONVEYANCE DESIGN & CONSTRUCTION AUTHORITY

ENGINEERING PROJECT REPORT
DELTA CONVEYANCE PROJECT
SINGLE TUNNEL - BETHANY RESERVOIR ALTERNATIVE

NORTH TUNNEL
PLAN AND PROFILE - SHEET 1 OF 2

PROJECT NO. W8X97000
SHEET NO. STB-C-1060TN
REV
SEQUENCE NO.

STB-C-1060TN_W8X97000.dgn

PLOT DATE:12/13/2021 PLOT TIME:10:32:07 AM

PLAN
1"=1500'

0 1500 3000
SCALE IN FEET

NOTES:

1. ALT 36' ID TUNNEL SHOWN FOR 6,000 cfs.
2. TOPOGRAPHY DATA IS BASED ON USGS NATIONAL ELEVATION DATASET (NED). DATA IS FOR CONCEPTUAL USE ONLY.
3. SEE SHAFT SITE PLANS FOR DISTURBANCE LIMITS.

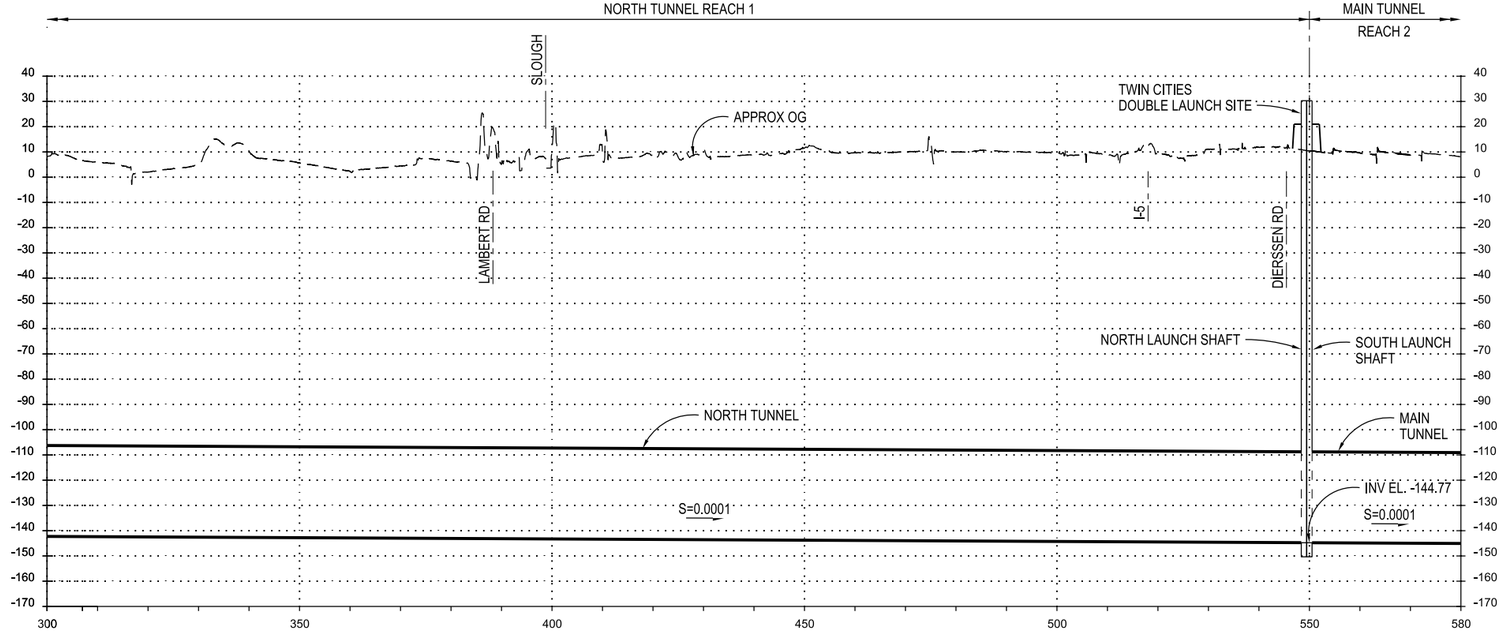

PROFILE
VERTICAL EXAGGERATION = x50

TUNNELS AND SHAFTS

VERIFY SCALE
BAR IS ONE INCH ON ORIGINAL DRAWING.
0 1"

REV	DATE	DESCRIPTION	SUB.	APPD
	12/23/2021	FINAL DRAFT BASELINE DRAWINGS		

DESIGNED: MARTIN ELLIS
DRAWN: RUSSELL TORADO
CHECKED: STEVE DUBNEWYCH
APPROVAL RECOMMENDED
APPROVAL BY

DCA
DELTA CONVEYANCE DESIGN & CONSTRUCTION AUTHORITY

ENGINEERING PROJECT REPORT
DELTA CONVEYANCE PROJECT
SINGLE TUNNEL - BETHANY RESERVOIR ALTERNATIVE

NORTH TUNNEL
PLAN AND PROFILE - SHEET 2 OF 2

PROJECT NO. W8X97000
SHEET NO. STB-C-1070TN
REV
SEQUENCE NO.

STB-C-1070TN_W8X97000.dgn

PLOT DATE:12/15/2021 PLOT TIME:7:19:03 PM

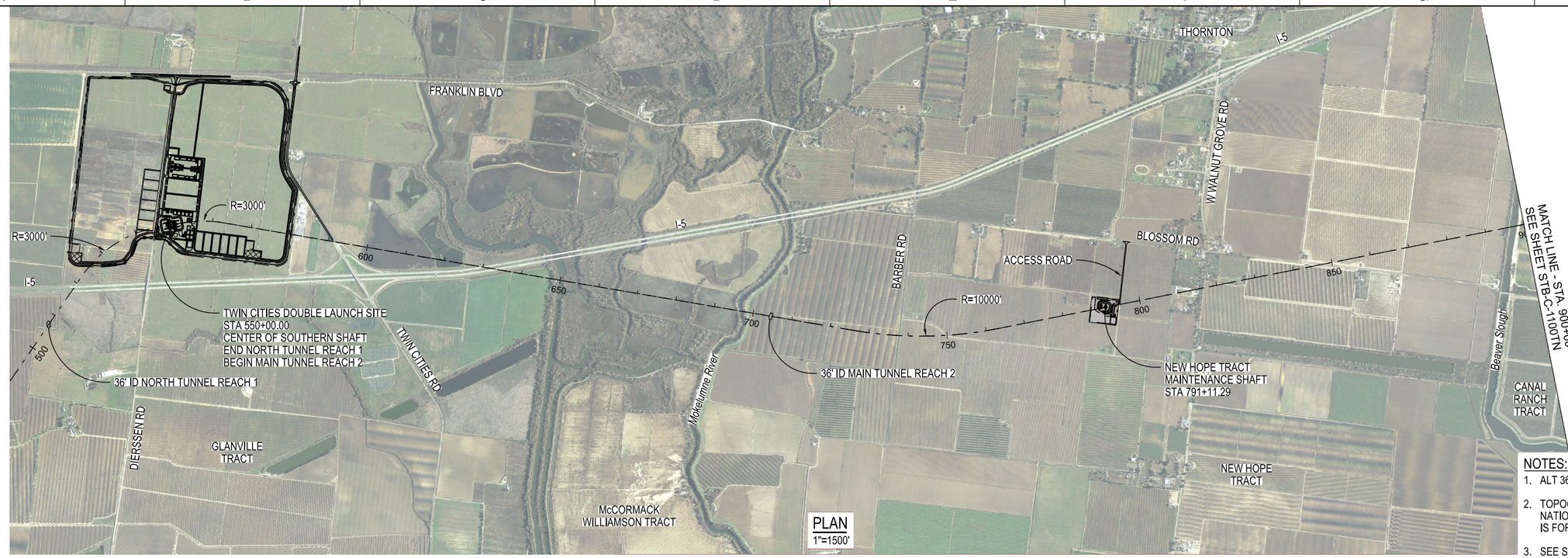

PLAN
1"=1500'

NOTES:

1. ALT 36' ID TUNNEL SHOWN FOR 6,000 cfs.
2. TOPOGRAPHY DATA IS BASED ON USGS NATIONAL ELEVATION DATASET (NED). DATA IS FOR CONCEPTUAL USE ONLY.
3. SEE SHAFT SITE PLANS FOR DISTURBANCE LIMITS.

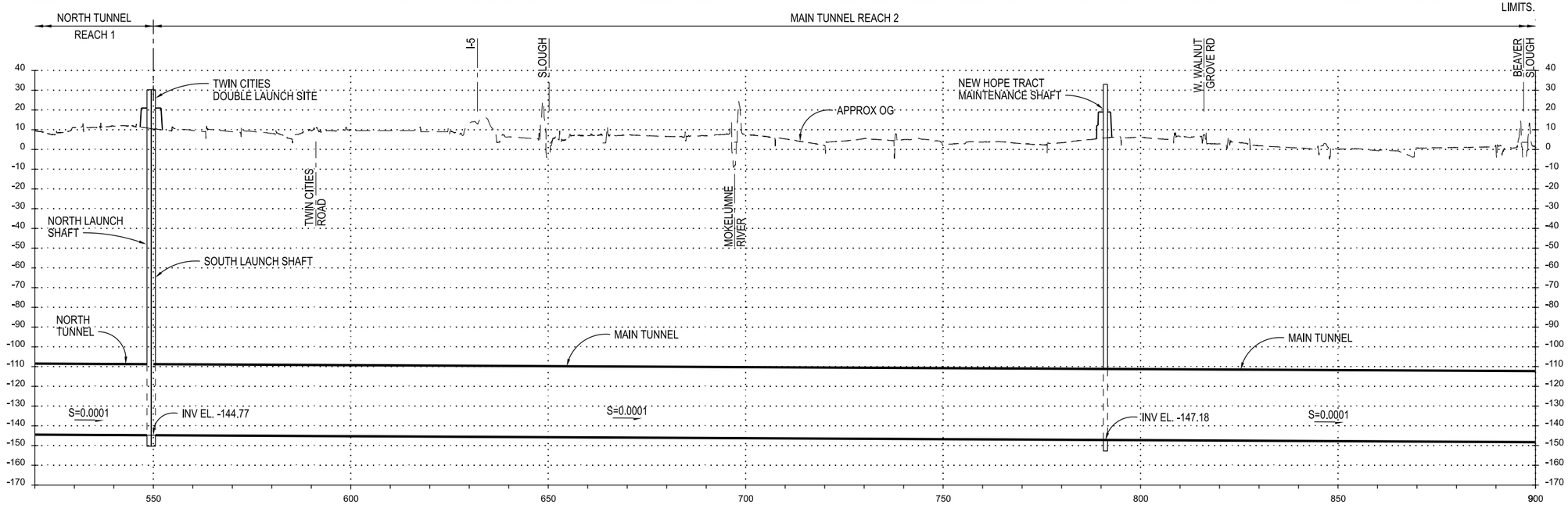

PROFILE
VERTICAL EXAGGERATION = x50

TUNNELS AND SHAFTS

VERIFY SCALE
BAR IS ONE INCH ON ORIGINAL DRAWING.
0 1"

REV	DATE	DESCRIPTION	SUB.	APPD
	12/23/2021	FINAL DRAFT BASELINE DRAWINGS		

DESIGNED: MARTIN ELLIS
DRAWN: RUSSELL TORADO
CHECKED: STEVE DUBNEWYCH
APPROVAL RECOMMENDED
APPROVAL BY

DELTA CONVEYANCE DESIGN & CONSTRUCTION AUTHORITY

ENGINEERING PROJECT REPORT
DELTA CONVEYANCE PROJECT
SINGLE TUNNEL - BETHANY RESERVOIR ALTERNATIVE

MAIN TUNNEL PLAN AND PROFILE
SHEET 1 OF 5

PROJECT NO. W8X97000
SHEET NO. STB-C-1090TN
REV
SEQUENCE NO.

STB-C-1090TN_W8X97000.dgn

PLOT DATE:12/15/2021 PLOT TIME:7:04:49 PM

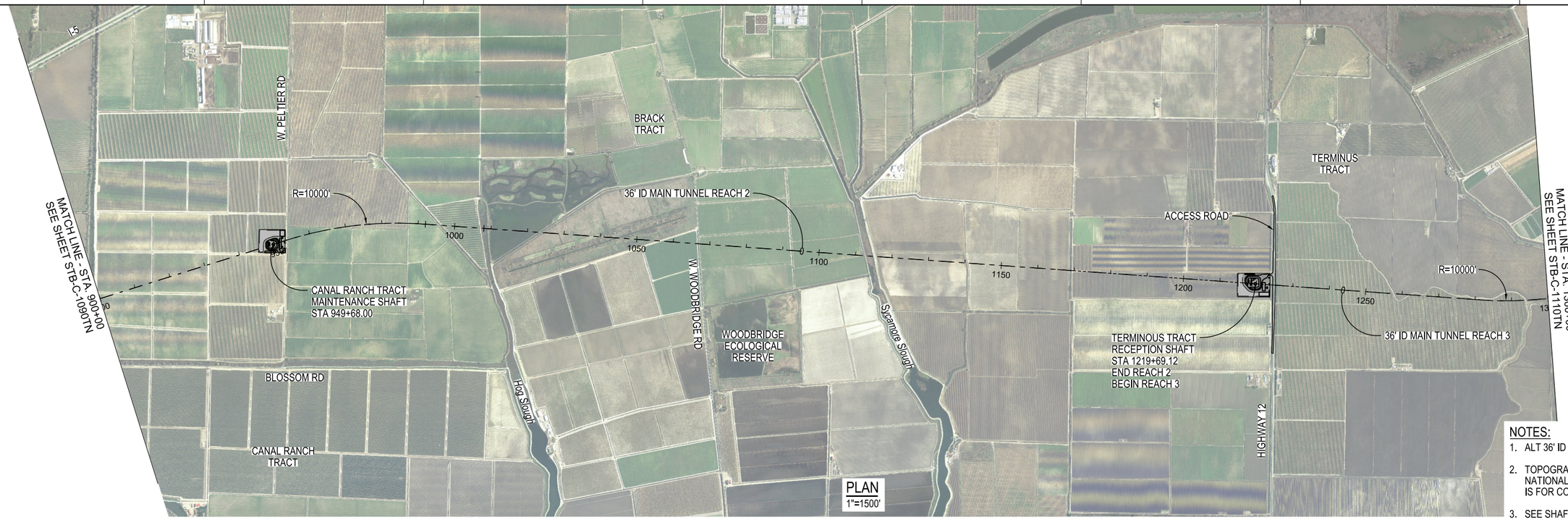

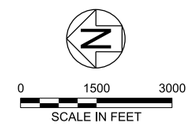

NOTES:

1. ALT 36' ID TUNNEL SHOWN FOR 6,000 cfs.
2. TOPOGRAPHY DATA IS BASED ON USGS NATIONAL ELEVATION DATASET (NED). DATA IS FOR CONCEPTUAL USE ONLY.
3. SEE SHAFT SITE PLANS FOR DISTURBANCE LIMITS.

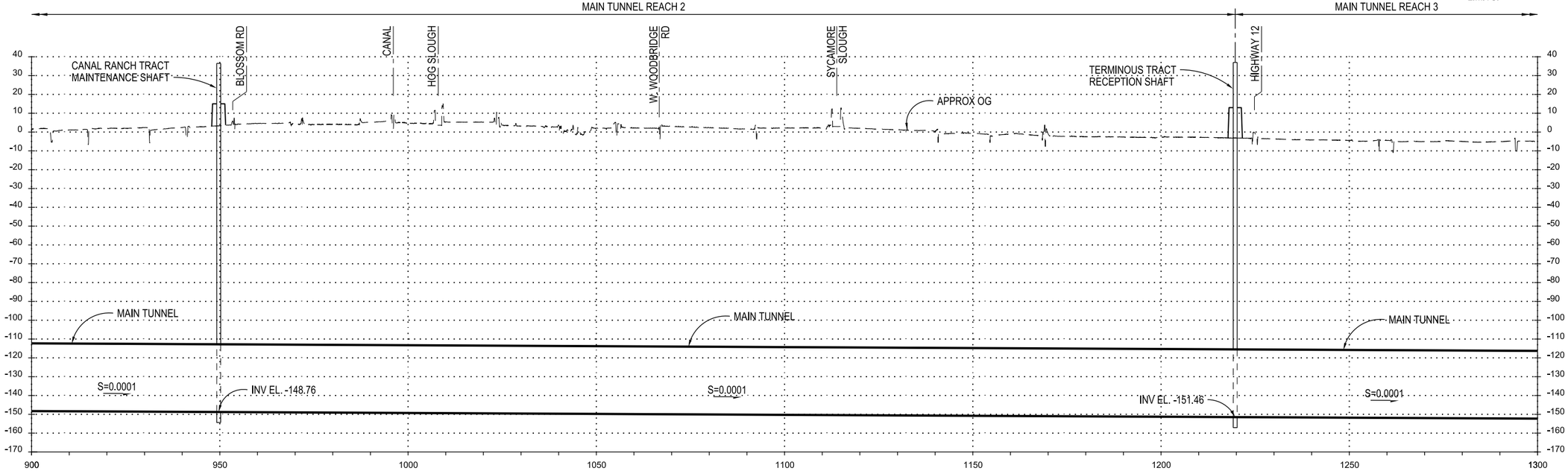

PROFILE

VERTICAL EXAGGERATION = x50

TUNNELS AND SHAFTS

VERIFY SCALE
BAR IS ONE INCH ON ORIGINAL DRAWING.
0 1"

REV	DATE	DESCRIPTION	SUB.	APPD
	12/23/2021	FINAL DRAFT BASELINE DRAWINGS		

DESIGNED: MARTIN ELLIS
DRAWN: RUSSELL TORADO
CHECKED: STEVE DUBNEWYCH
APPROVAL RECOMMENDED
APPROVAL BY

DCA
DELTA CONVEYANCE DESIGN & CONSTRUCTION AUTHORITY

ENGINEERING PROJECT REPORT
DELTA CONVEYANCE PROJECT
SINGLE TUNNEL - BETHANY RESERVOIR ALTERNATIVE

MAIN TUNNEL PLAN AND PROFILE
SHEET 2 OF 5

PROJECT NO. W8X97000
SHEET NO. STB-C-1100TN
REV
SEQUENCE NO.

STB-C-1100TN_W8X97000.dgn

PLOT DATE:11/11/2021 PLOT TIME:12:11:47 PM

PLAN
1"=1500'

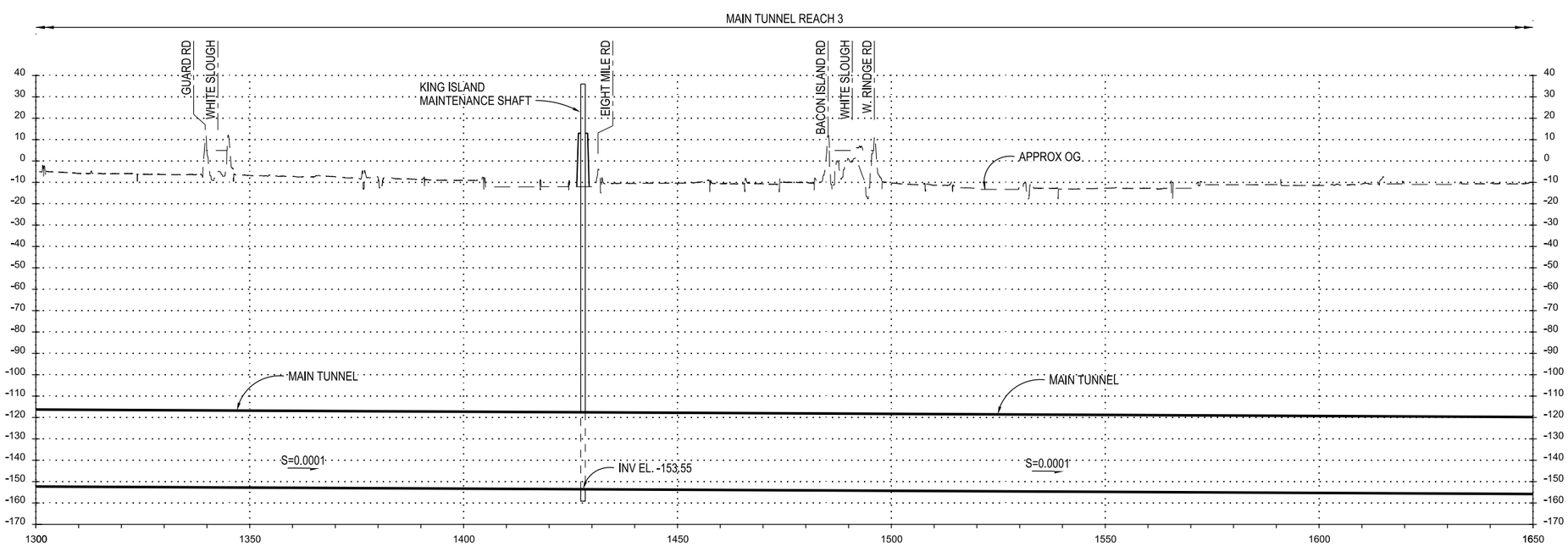

PROFILE
VERTICAL EXAGGERATION = x50

0 1500 3000
SCALE IN FEET

NOTES:

1. ALT 36' ID TUNNEL SHOWN FOR 6,000 cfs.
2. TOPOGRAPHY DATA IS BASED ON USGS NATIONAL ELEVATION DATASET (NED). DATA IS FOR CONCEPTUAL USE ONLY.
3. SEE SHAFT SITE PLANS FOR DISTURBANCE LIMITS.

TUNNELS AND SHAFTS

VERIFY SCALE
BAR IS ONE INCH ON ORIGINAL DRAWING.
0 1"

REV	DATE	DESCRIPTION	SUB.	APPD
	12/23/2021	FINAL DRAFT BASELINE DRAWINGS		

DESIGNED: MARTIN ELLIS
DRAWN: RUSSELL TORADO
CHECKED: STEVE DUBNEWYCH
APPROVAL RECOMMENDED
APPROVAL BY

DELTA CONVEYANCE DESIGN & CONSTRUCTION AUTHORITY

ENGINEERING PROJECT REPORT
DELTA CONVEYANCE PROJECT
SINGLE TUNNEL - BETHANY RESERVOIR ALTERNATIVE

MAIN TUNNEL PLAN AND PROFILE
SHEET 3 OF 5

PROJECT NO. W8X97000
SHEET NO. STB-C-1110TN
REV
SEQUENCE NO.

STB-C-1110TN_W8X97000.dgn

PLOT DATE:11/11/2021 PLOT TIME:12:13:04 PM

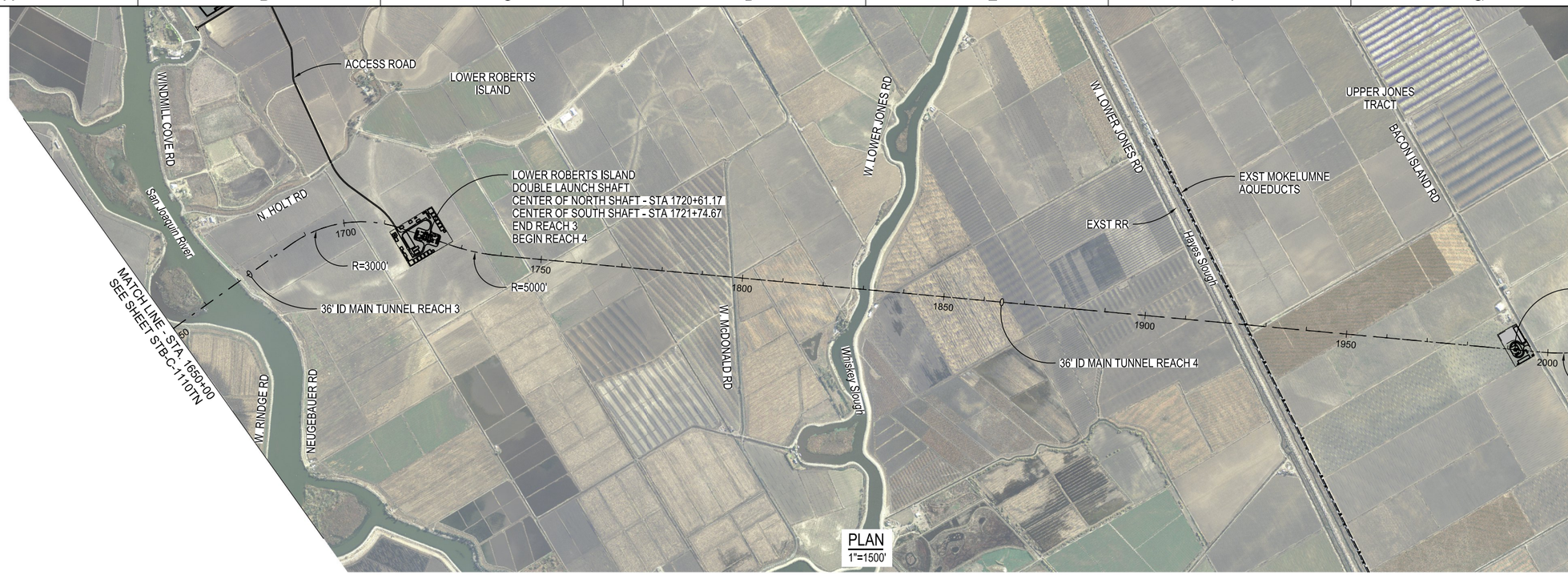

PLAN
1"=1500'

NOTES:

1. ALT 36' ID TUNNEL SHOWN FOR 6,000 cfs.
2. TOPOGRAPHY DATA IS BASED ON USGS NATIONAL ELEVATION DATASET (NED). DATA IS FOR CONCEPTUAL USE ONLY.
3. SEE SHAFT SITE PLANS FOR DISTURBANCE LIMITS.
4. BATHYMETRY DATA FROM STA:1664+52 TO STA:1669+42 WAS PROVIDED BY THE CALIFORNIA DEPARTMENT OF WATER RESOURCES

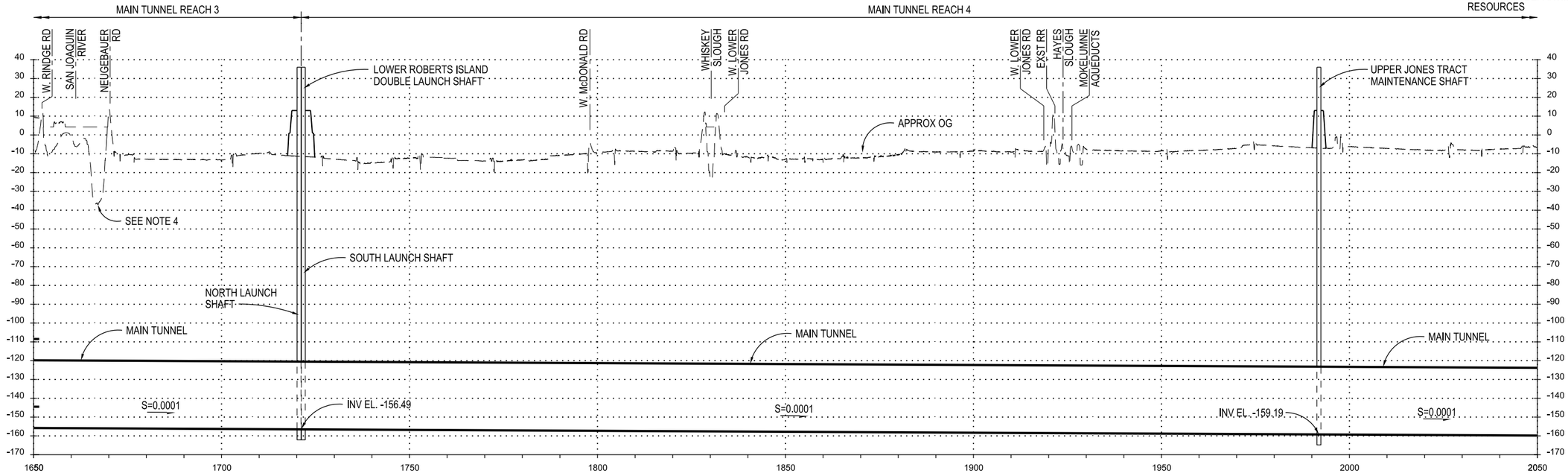

PROFILE
VERTICAL EXAGGERATION = x50

TUNNELS AND SHAFTS

VERIFY SCALE
BAR IS ONE INCH ON ORIGINAL DRAWING.
0 1"

REV	DATE	DESCRIPTION	SUB.	APPD
	12/23/2021	FINAL DRAFT BASELINE DRAWINGS		

DESIGNED: MARTIN ELLIS
DRAWN: RUSSELL TORADO
CHECKED: STEVE DUBNEWYCH
APPROVAL RECOMMENDED
APPROVAL BY

DELTA CONVEYANCE DESIGN & CONSTRUCTION AUTHORITY

ENGINEERING PROJECT REPORT
DELTA CONVEYANCE PROJECT
SINGLE TUNNEL - BETHANY RESERVOIR ALTERNATIVE

MAIN TUNNEL PLAN AND PROFILE
SHEET 4 OF 5

PROJECT NO. W8X97000
SHEET NO. STB-C-1120TN
REV
SEQUENCE NO.

STB-C-1120TN_W8X97000.dgn

PLOT DATE:11/11/2021 PLOT TIME:12:07:57 PM

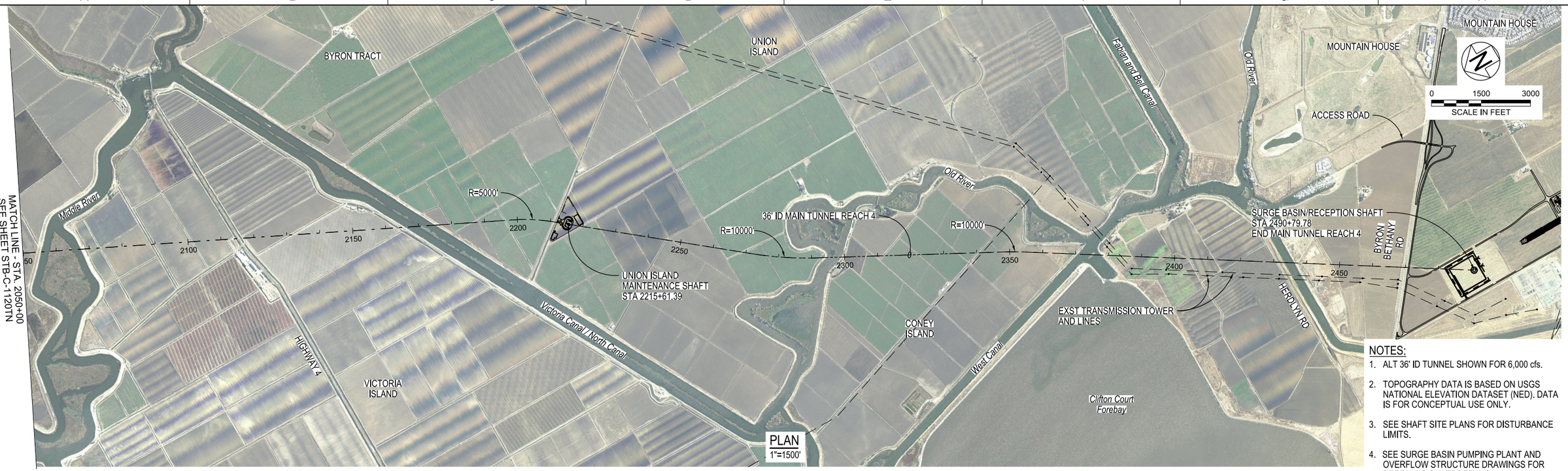

NOTES:

1. ALT 36' ID TUNNEL SHOWN FOR 6,000 cfs.
2. TOPOGRAPHY DATA IS BASED ON USGS NATIONAL ELEVATION DATASET (NED). DATA IS FOR CONCEPTUAL USE ONLY.
3. SEE SHAFT SITE PLANS FOR DISTURBANCE LIMITS.
4. SEE SURGE BASIN PUMPING PLANT AND OVERFLOW STRUCTURE DRAWINGS FOR RECEIVING SHAFT DETAILS.

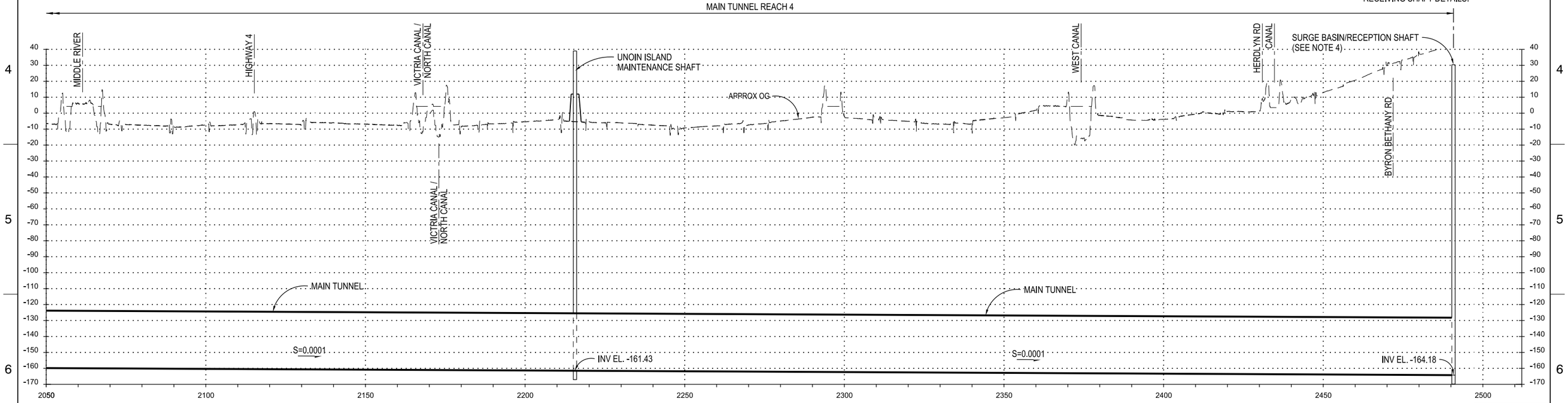

PROFILE

VERTICAL EXAGGERATION = x50

TUNNELS AND SHAFTS

VERIFY SCALE
BAR IS ONE INCH ON ORIGINAL DRAWING.
0 1"

REV	DATE	DESCRIPTION	SUB.	APPD
	12/23/2021	FINAL DRAFT BASELINE DRAWINGS		

DESIGNED: MARTIN ELLIS
DRAWN: RUSSELL TORADO
CHECKED: STEVE DUBNEWYCH
APPROVAL RECOMMENDED
APPROVAL BY

DELTA CONVEYANCE DESIGN & CONSTRUCTION AUTHORITY

ENGINEERING PROJECT REPORT
DELTA CONVEYANCE PROJECT
SINGLE TUNNEL - BETHANY RESERVOIR ALTERNATIVE

MAIN TUNNEL PLAN AND PROFILE
SHEET 5 OF 5

PROJECT NO. W8X97000
SHEET NO. STB-C-1130TN
REV
SEQUENCE NO.

STB-C-1130TN_W8X97000.dgn

PLOT DATE:11/11/2021 PLOT TIME:12:09:56 PM

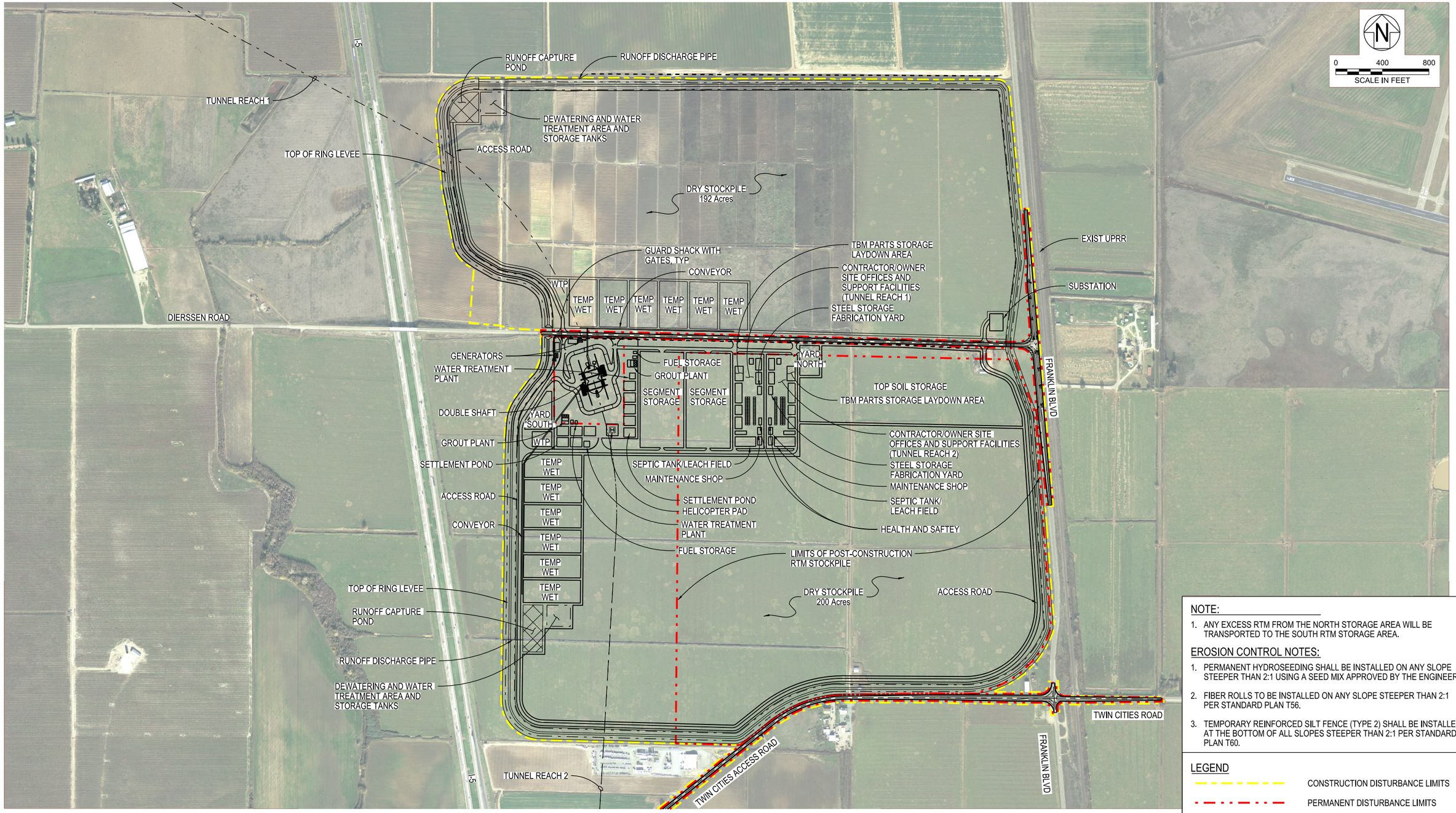

PLAN
1"=400'

NOTE:

1. ANY EXCESS RTM FROM THE NORTH STORAGE AREA WILL BE TRANSPORTED TO THE SOUTH RTM STORAGE AREA.

EROSION CONTROL NOTES:

1. PERMANENT HYDROSEEDING SHALL BE INSTALLED ON ANY SLOPE STEEPER THAN 2:1 USING A SEED MIX APPROVED BY THE ENGINEER.
2. FIBER ROLLS TO BE INSTALLED ON ANY SLOPE STEEPER THAN 2:1 PER STANDARD PLAN T56.
3. TEMPORARY REINFORCED SILT FENCE (TYPE 2) SHALL BE INSTALLED AT THE BOTTOM OF ALL SLOPES STEEPER THAN 2:1 PER STANDARD PLAN T60.

LEGEND

CONSTRUCTION DISTURBANCE LIMITS

PERMANENT DISTURBANCE LIMITS

TUNNELS AND SHAFTS

VERIFY SCALE
BAR IS ONE INCH ON ORIGINAL DRAWING.
0 1"

REV	DATE	DESCRIPTION	SUB.	APPD
	12/23/2021	FINAL DRAFT BASELINE DRAWINGS		

DESIGNED: MARTIN ELLIS
DRAWN: RUSSELL TORADO
CHECKED: STEVE DUBNEWYCH
APPROVAL RECOMMENDED
APPROVAL BY

DELTA CONVEYANCE DESIGN & CONSTRUCTION AUTHORITY

ENGINEERING PROJECT REPORT
DELTA CONVEYANCE PROJECT
SINGLE TUNNEL - BETHANY RESERVOIR ALTERNATIVE

TWIN CITIES DBL LAUNCH SHAFT SITE PLAN DISTURBANCE LIMITS

PROJECT NO. W8X97000
SHEET NO. STB-C-1170TN
REV
SEQUENCE NO.

STB-C-1170TN_W8X97000.dgn

PLOT DATE:12/15/2021 PLOT TIME:7:06:11 PM

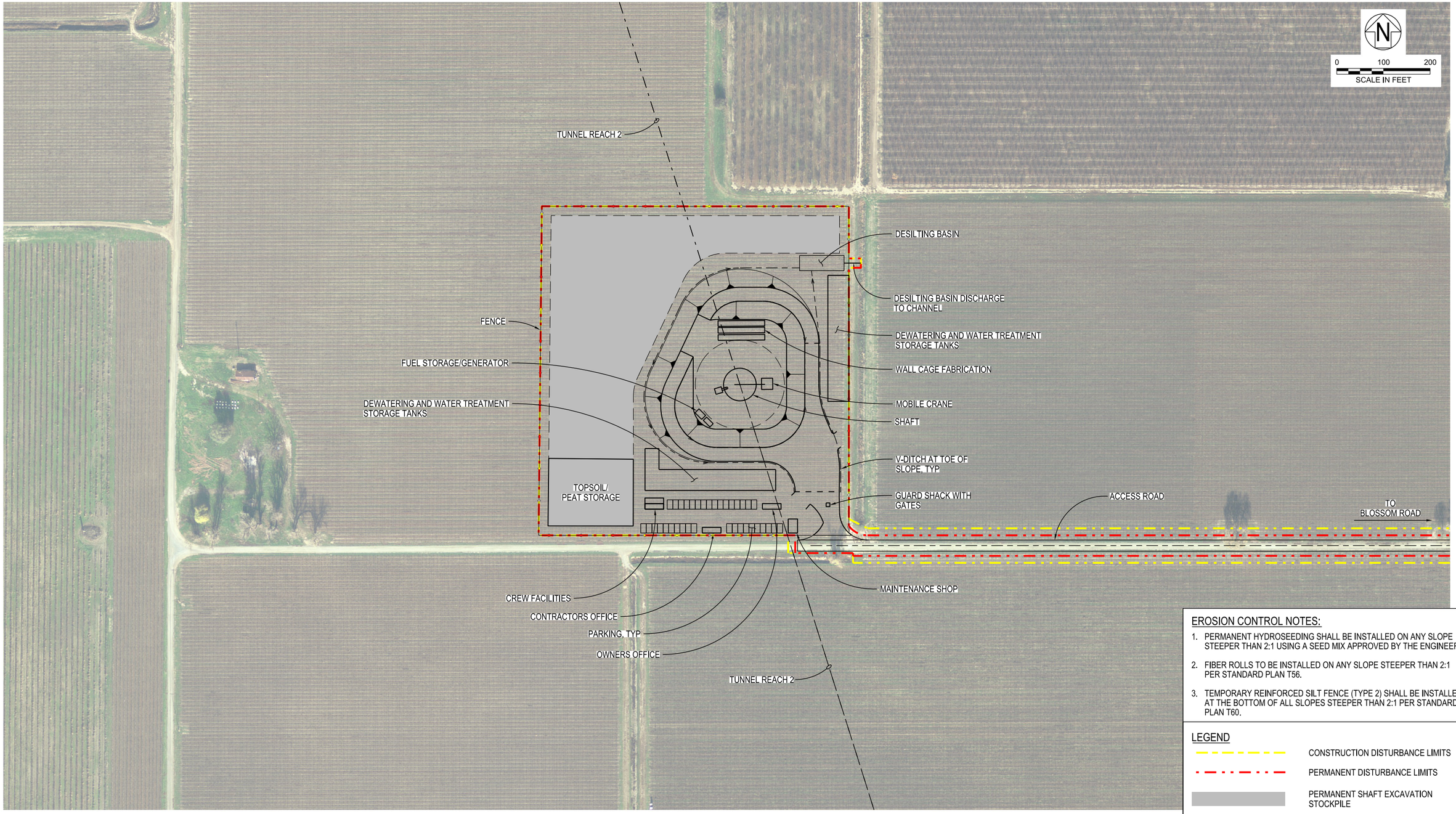

EROSION CONTROL NOTES:

1. PERMANENT HYDROSEEDING SHALL BE INSTALLED ON ANY SLOPE STEEPER THAN 2:1 USING A SEED MIX APPROVED BY THE ENGINEER.
2. FIBER ROLLS TO BE INSTALLED ON ANY SLOPE STEEPER THAN 2:1 PER STANDARD PLAN T56.
3. TEMPORARY REINFORCED SILT FENCE (TYPE 2) SHALL BE INSTALLED AT THE BOTTOM OF ALL SLOPES STEEPER THAN 2:1 PER STANDARD PLAN T60.

LEGEND

- CONSTRUCTION DISTURBANCE LIMITS
- PERMANENT DISTURBANCE LIMITS
- PERMANENT SHAFT EXCAVATION STOCKPILE

PLAN
1"=100'

VERIFY SCALE
BAR IS ONE INCH ON ORIGINAL DRAWING.
0 1"

TUNNELS AND SHAFTS

REV	DATE	DESCRIPTION	SUB.	APPD
	12/23/2021	FINAL DRAFT BASELINE DRAWINGS		

DESIGNED: MARTIN ELLIS
DRAWN: RUSSELL TORADO
CHECKED: STEVE DUBNEWYCH
APPROVAL RECOMMENDED
APPROVAL BY

DELTA CONVEYANCE DESIGN & CONSTRUCTION AUTHORITY

ENGINEERING PROJECT REPORT
DELTA CONVEYANCE PROJECT
SINGLE TUNNEL - BETHANY RESERVOIR ALTERNATIVE

NEW HOPE TRACT MAINT SHAFT SITE PLAN DISTURBANCE LIMITS

PROJECT NO. W8X97000
SHEET NO. STB-C-1180TN
REV
SEQUENCE NO.

STB-C-1180TN_W8X97000.dgn

PLOT DATE:11/11/2021 PLOT TIME:12:09:17 PM

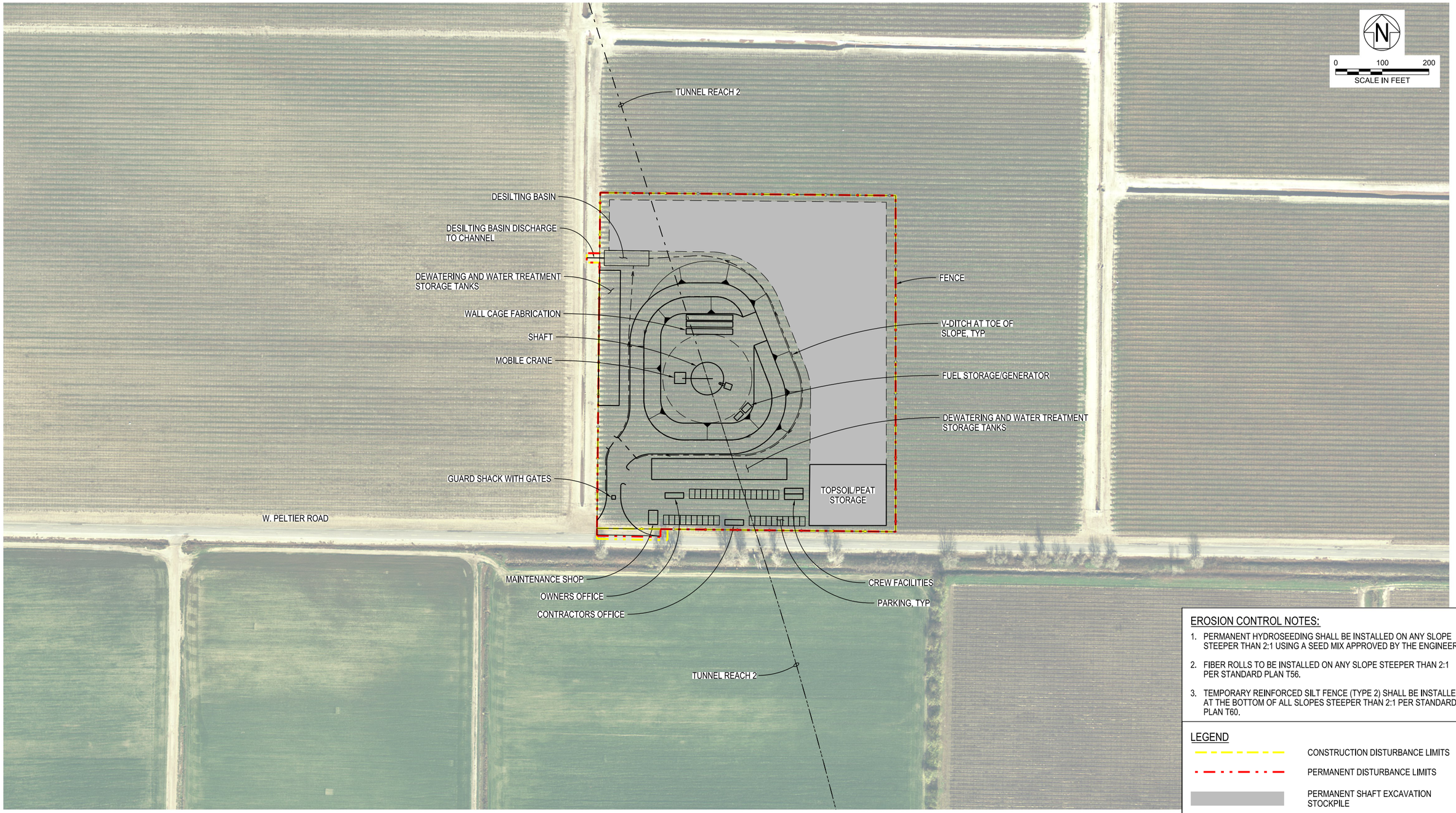

EROSION CONTROL NOTES:

1. PERMANENT HYDROSEEDING SHALL BE INSTALLED ON ANY SLOPE STEEPER THAN 2:1 USING A SEED MIX APPROVED BY THE ENGINEER.
2. FIBER ROLLS TO BE INSTALLED ON ANY SLOPE STEEPER THAN 2:1 PER STANDARD PLAN T56.
3. TEMPORARY REINFORCED SILT FENCE (TYPE 2) SHALL BE INSTALLED AT THE BOTTOM OF ALL SLOPES STEEPER THAN 2:1 PER STANDARD PLAN T60.

LEGEND

- CONSTRUCTION DISTURBANCE LIMITS
- PERMANENT DISTURBANCE LIMITS
- PERMANENT SHAFT EXCAVATION STOCKPILE

PLAN
1"=100'

TUNNELS AND SHAFTS

VERIFY SCALE
BAR IS ONE INCH ON ORIGINAL DRAWING.
0 1"

REV	DATE	DESCRIPTION	SUB.	APPD
	12/23/2021	FINAL DRAFT BASELINE DRAWINGS		

DESIGNED: MARTIN ELLIS
DRAWN: RUSSELL TORADO
CHECKED: STEVE DUBNEWYCH
APPROVAL RECOMMENDED
APPROVAL BY

DELTA CONVEYANCE DESIGN & CONSTRUCTION AUTHORITY

ENGINEERING PROJECT REPORT
DELTA CONVEYANCE PROJECT
SINGLE TUNNEL - BETHANY RESERVOIR ALTERNATIVE

CANAL RANCH TRACT MAINT SHAFT SITE PLAN DISTURBANCE LIMITS

PROJECT NO. W8X97000
SHEET NO. STB-C-1190TN
REV | SEQUENCE NO.

STB-C-1190TN_W8X97000.dgn

PLOT DATE:11/11/2021 PLOT TIME:12:09:29 PM

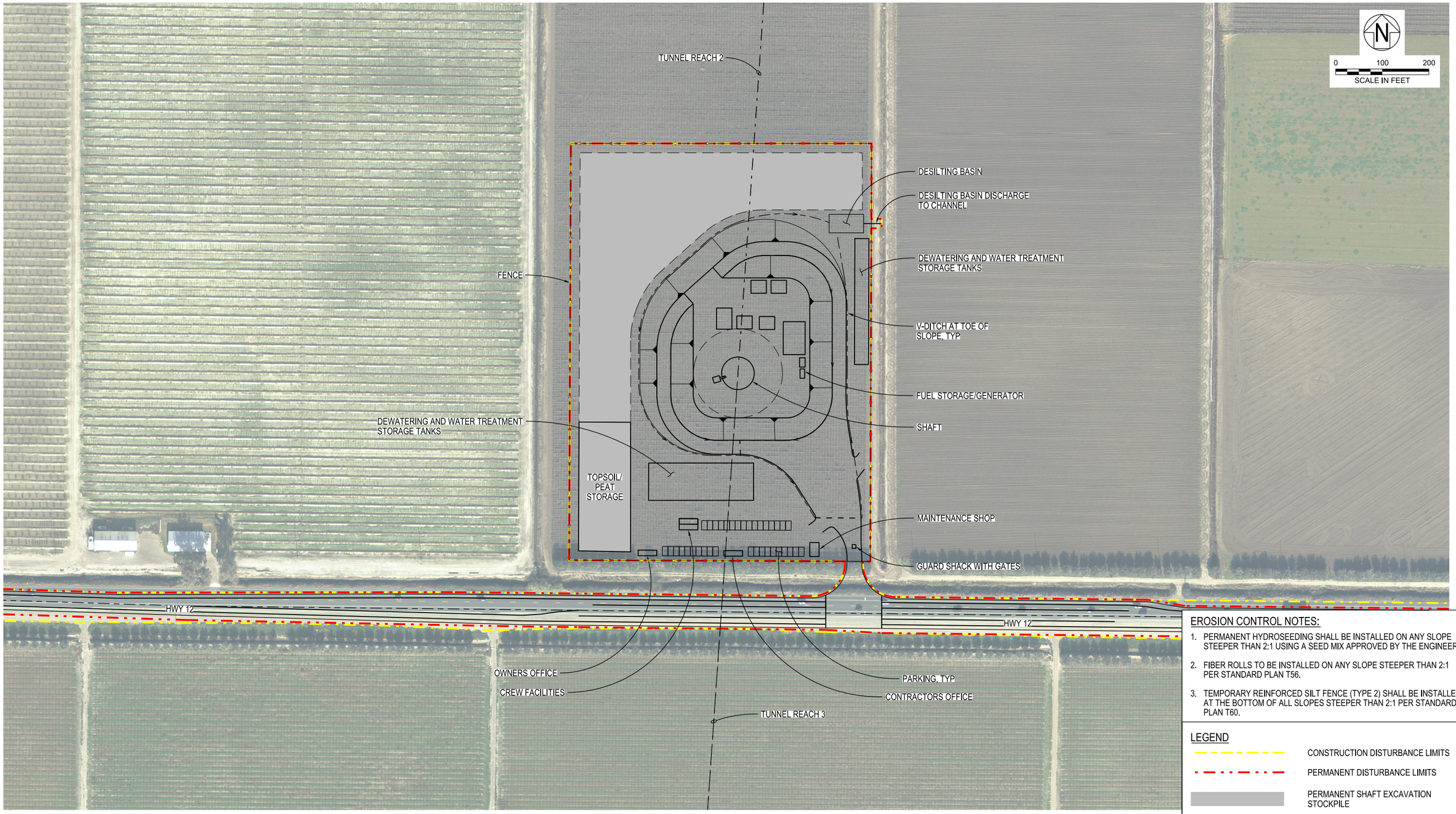

EROSION CONTROL NOTES:

1. PERMANENT HYDROSEEDING SHALL BE INSTALLED ON ANY SLOPE STEEPER THAN 2:1 USING A SEED MIX APPROVED BY THE ENGINEER.
2. FIBER ROLLS TO BE INSTALLED ON ANY SLOPE STEEPER THAN 2:1 PER STANDARD PLAN T56.
3. TEMPORARY REINFORCED SILT FENCE (TYPE 2) SHALL BE INSTALLED AT THE BOTTOM OF ALL SLOPES STEEPER THAN 2:1 PER STANDARD PLAN T60.

LEGEND

- CONSTRUCTION DISTURBANCE LIMITS
- PERMANENT DISTURBANCE LIMITS
- PERMANENT SHAFT EXCAVATION STOCKPILE

PLAN
1"=100'

TUNNELS AND SHAFTS

VERIFY SCALE
BAR IS ONE INCH ON ORIGINAL DRAWING.
0 1"

REV	DATE	DESCRIPTION	SUB.	APPD
	12/23/2021	FINAL DRAFT BASELINE DRAWINGS		

DESIGNED: MARTIN ELLIS
DRAWN: RUSSELL TORADO
CHECKED: STEVE DUBNEWYCH
APPROVAL RECOMMENDED
APPROVAL BY

DELTA CONVEYANCE DESIGN & CONSTRUCTION AUTHORITY

ENGINEERING PROJECT REPORT
DELTA CONVEYANCE PROJECT
SINGLE TUNNEL - BETHANY RESERVOIR ALTERNATIVE

TERMINOUS TRACT RECEPTION SHAFT SITE PLAN DISTURBANCE LIMITS

PROJECT NO. W8X97000
SHEET NO. STB-C-1200TN
REV | SEQUENCE NO.

STB-C-1200TN_W8X97000.dgn

PLOT DATE:11/11/2021 PLOT TIME:12:08:42 PM

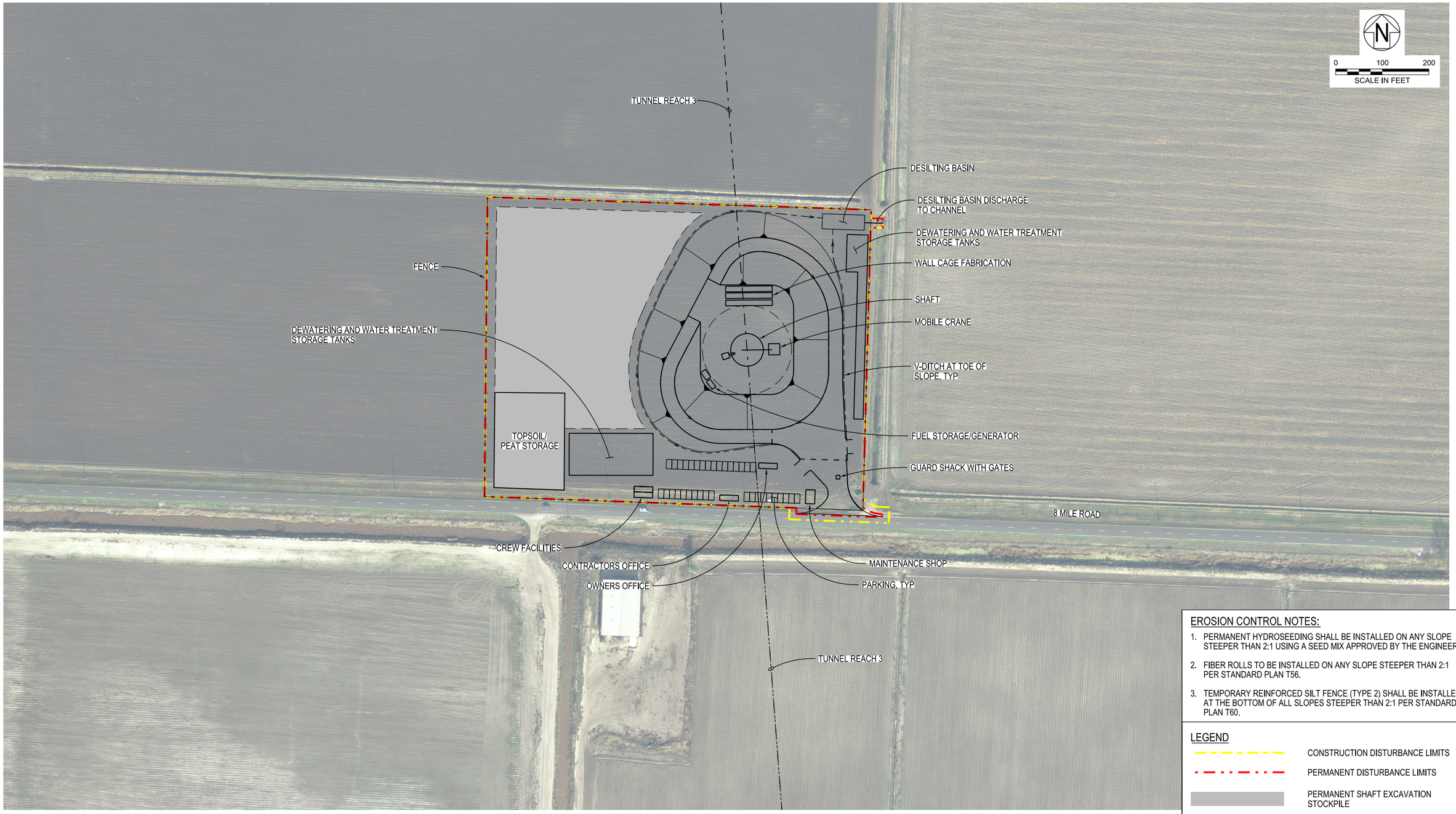

PLAN
1"=100'

EROSION CONTROL NOTES:

1. PERMANENT HYDROSEEDING SHALL BE INSTALLED ON ANY SLOPE STEEPER THAN 2:1 USING A SEED MIX APPROVED BY THE ENGINEER.
2. FIBER ROLLS TO BE INSTALLED ON ANY SLOPE STEEPER THAN 2:1 PER STANDARD PLAN T56.
3. TEMPORARY REINFORCED SILT FENCE (TYPE 2) SHALL BE INSTALLED AT THE BOTTOM OF ALL SLOPES STEEPER THAN 2:1 PER STANDARD PLAN T60.

LEGEND

- CONSTRUCTION DISTURBANCE LIMITS
- PERMANENT DISTURBANCE LIMITS
- PERMANENT SHAFT EXCAVATION STOCKPILE

TUNNELS AND SHAFTS

VERIFY SCALE
BAR IS ONE INCH ON ORIGINAL DRAWING.
0 1"

REV	DATE	DESCRIPTION	SUB.	APPD
	12/23/2021	FINAL DRAFT BASELINE DRAWINGS		

DESIGNED: MARTIN ELLIS
DRAWN: RUSSELL TORADO
CHECKED: STEVE DUBNEWYCH
APPROVAL RECOMMENDED
APPROVAL BY

DELTA CONVEYANCE DESIGN & CONSTRUCTION AUTHORITY

ENGINEERING PROJECT REPORT
DELTA CONVEYANCE PROJECT
SINGLE TUNNEL - BETHANY RESERVOIR ALTERNATIVE

KING ISLAND MAINTENANCE SHAFT SITE PLAN DISTURBANCE LIMITS

PROJECT NO. W8X97000
SHEET NO. STB-C-1210TN
REV
SEQUENCE NO.

STB-C-1210TN_W8X97000.dgn

PLOT DATE:11/11/2021 PLOT TIME:12:10:24 PM

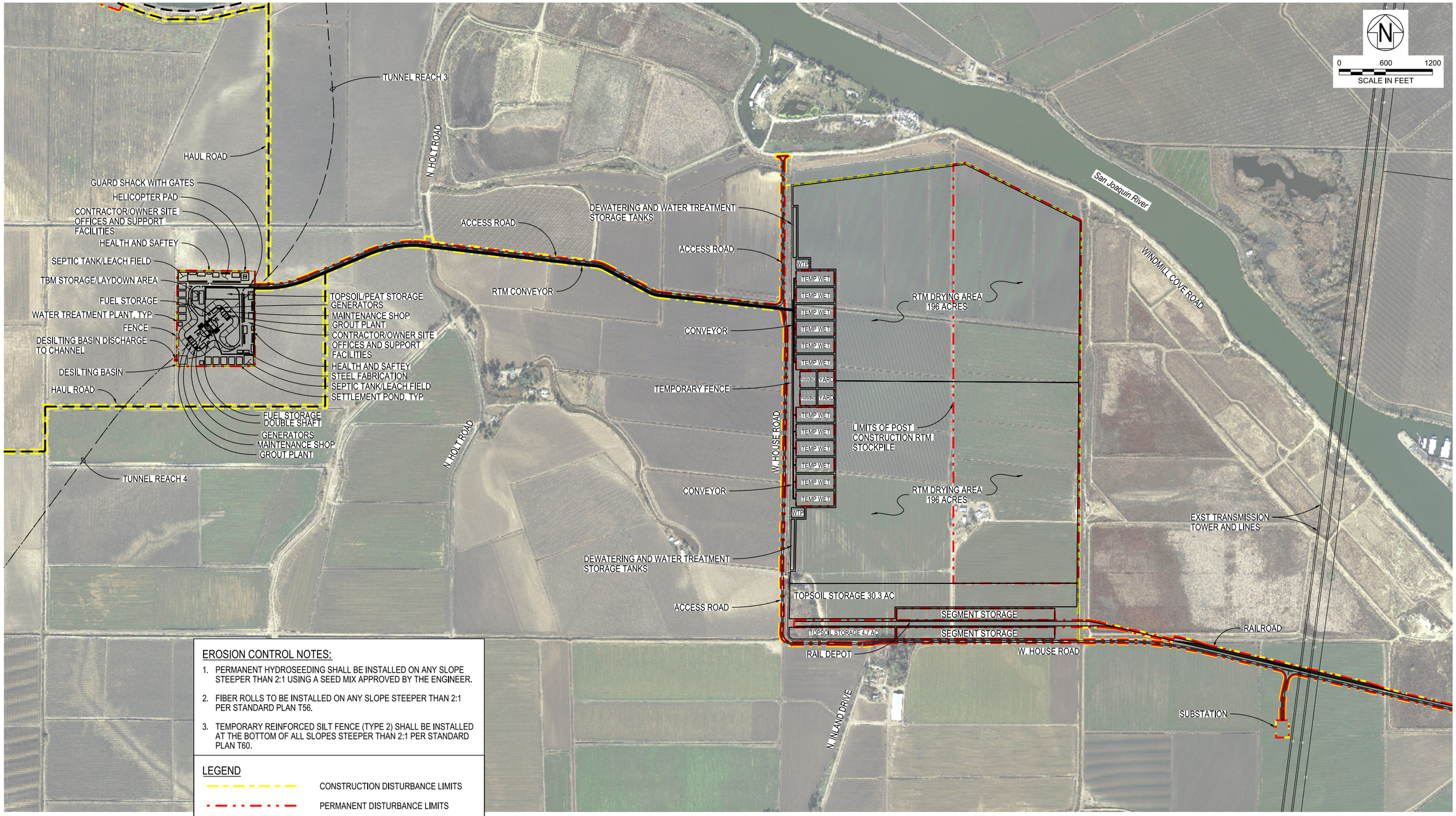

EROSION CONTROL NOTES:

1. PERMANENT HYDROSEEDING SHALL BE INSTALLED ON ANY SLOPE STEEPER THAN 2:1 USING A SEED MIX APPROVED BY THE ENGINEER.
2. FIBER ROLLS TO BE INSTALLED ON ANY SLOPE STEEPER THAN 2:1 PER STANDARD PLAN T56.
3. TEMPORARY REINFORCED SILT FENCE (TYPE 2) SHALL BE INSTALLED AT THE BOTTOM OF ALL SLOPES STEEPER THAN 2:1 PER STANDARD PLAN T60.

LEGEND

CONSTRUCTION DISTURBANCE LIMITS

PERMANENT DISTURBANCE LIMITS

PLAN
1"=600'

TUNNELS AND SHAFTS

VERIFY SCALE
BAR IS ONE INCH ON ORIGINAL DRAWING.
0 1"

REV	DATE	DESCRIPTION	SUB.	APPD
	12/23/2021	FINAL DRAFT BASELINE DRAWINGS		

DESIGNED: MARTIN ELLIS
DRAWN: RUSSELL TORAD0
CHECKED: STEVE DUBNEWYCH
APPROVAL RECOMMENDED
APPROVAL BY

DELTA CONVEYANCE DESIGN & CONSTRUCTION AUTHORITY

ENGINEERING PROJECT REPORT
DELTA CONVEYANCE PROJECT
SINGLE TUNNEL - BETHANY RESERVOIR ALTERNATIVE

LOWER ROBERTS IS. DOUBLE LAUNCH SITE PLAN DISTURBANCE LIMITS

PROJECT NO. W8X97000
SHEET NO. STB-C-1220TN
REV
SEQUENCE NO.

STB-C-1220TN_W8X97000.dgn

PLOT DATE:11/11/2021 PLOT TIME:12:07:50 PM

EROSION CONTROL NOTES:

1. PERMANENT HYDROSEEDING SHALL BE INSTALLED ON ANY SLOPE STEEPER THAN 2:1 USING A SEED MIX APPROVED BY THE ENGINEER.
2. FIBER ROLLS TO BE INSTALLED ON ANY SLOPE STEEPER THAN 2:1 PER STANDARD PLAN T56.
3. TEMPORARY REINFORCED SILT FENCE (TYPE 2) SHALL BE INSTALLED AT THE BOTTOM OF ALL SLOPES STEEPER THAN 2:1 PER STANDARD PLAN T60.

LEGEND

- CONSTRUCTION DISTURBANCE LIMITS
- PERMANENT DISTURBANCE LIMITS
- PERMANENT SHAFT EXCAVATION STOCKPILE

PLAN
1"=100'

TUNNELS AND SHAFTS

VERIFY SCALE
BAR IS ONE INCH ON ORIGINAL DRAWING.
0 1"

REV	DATE	DESCRIPTION	SUB.	APPD
	12/23/2021	FINAL DRAFT BASELINE DRAWINGS		

DESIGNED: MARTIN ELLIS
DRAWN: RUSSELL TORADO
CHECKED: STEVE DUBNEWYCH
APPROVAL RECOMMENDED
APPROVAL BY

DELTA CONVEYANCE DESIGN & CONSTRUCTION AUTHORITY

ENGINEERING PROJECT REPORT
DELTA CONVEYANCE PROJECT
SINGLE TUNNEL - BETHANY RESERVOIR ALTERNATIVE

UPPER JONES TRACT MAINT SHAFT SITE PLAN DISTURBANCE LIMITS

PROJECT NO. W8X97000
SHEET NO. STB-C-1230TN
REV | SEQUENCE NO.

STB-C-1230TN_W8X97000.dgn

PLOT DATE:11/11/2021 PLOT TIME:12:08:19 PM

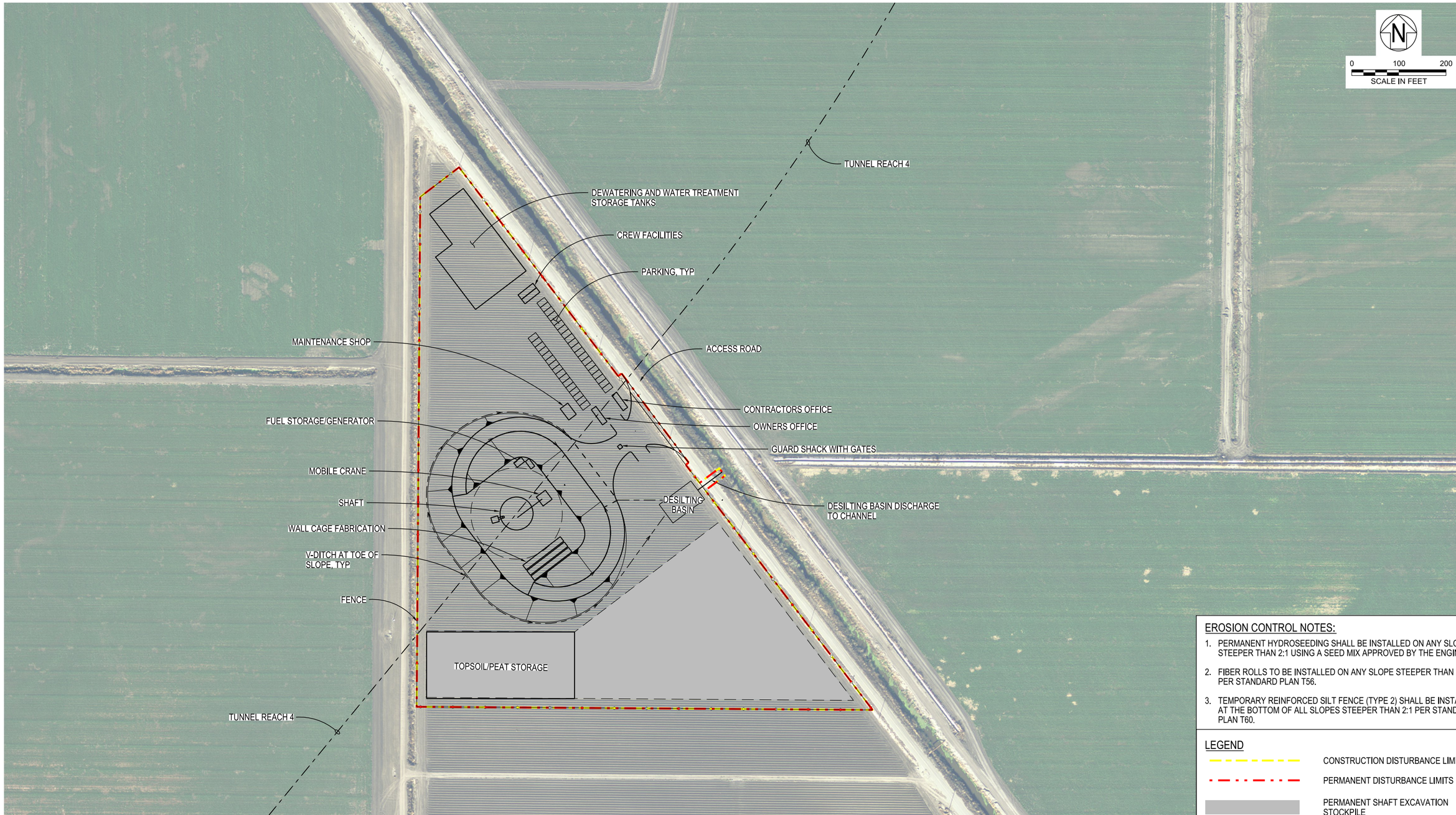

EROSION CONTROL NOTES:

1. PERMANENT HYDROSEEDING SHALL BE INSTALLED ON ANY SLOPE STEEPER THAN 2:1 USING A SEED MIX APPROVED BY THE ENGINEER.
2. FIBER ROLLS TO BE INSTALLED ON ANY SLOPE STEEPER THAN 2:1 PER STANDARD PLAN T56.
3. TEMPORARY REINFORCED SILT FENCE (TYPE 2) SHALL BE INSTALLED AT THE BOTTOM OF ALL SLOPES STEEPER THAN 2:1 PER STANDARD PLAN T60.

LEGEND

- CONSTRUCTION DISTURBANCE LIMITS
- PERMANENT DISTURBANCE LIMITS
- PERMANENT SHAFT EXCAVATION STOCKPILE

PLAN
1"=100'

TUNNELS AND SHAFTS

VERIFY SCALE
BAR IS ONE INCH ON ORIGINAL DRAWING.
0 1"

REV	DATE	DESCRIPTION	SUB.	APPD
	12/23/2021	FINAL DRAFT BASELINE DRAWINGS		

DESIGNED: MARTIN ELLIS
DRAWN: RUSSELL TORADO
CHECKED: STEVE DUBNEWYCH
APPROVAL RECOMMENDED
APPROVAL BY

DELTA CONVEYANCE DESIGN & CONSTRUCTION AUTHORITY

ENGINEERING PROJECT REPORT
DELTA CONVEYANCE PROJECT
SINGLE TUNNEL - BETHANY RESERVOIR ALTERNATIVE

UNION ISLAND MAINTENANCE SHAFT SITE PLAN DISTURBANCE LIMITS

PROJECT NO. W8X97000
SHEET NO. STB-C-1240TN
REV
SEQUENCE NO.

STB-C-1240TN_W8X97000.dgn

PLOT DATE:11/11/2021 PLOT TIME:12:13:08 PM

NOTES:

1. CROSS SECTION SHOWN IS A GENERAL CONCEPT AND DOES NOT REFLECT DIMENSIONS SHOWN FOR EACH SHAFT LOCATION DRAWING.
2. SECTION SHOULD NOT BE USED TO CALCULATE VOLUMES.
3. AREA OF GROUND TREATMENT WOULD BE THE SAME AS THE PAD LEVEL AREA.
4. FOR SHAFT PAD DETAILS AT INTAKES STRUCTURES, SURGE BASIN PUMPING PLANT AND DISCHARGE STRUCTURE, REFER TO RELEVANT FACILITY DRAWINGS.

SHAFT LOCATION	EXISTING GROUND LEVEL (EL)	PAD LEVEL TOP OF D'WALL (EL)	PAD HEIGHT (ABOVE GL) (FT)	DEPTH OF GROUND IMPROVEMENT* (FT)	PAD SITE WIDTH (FT)	PAD SITE LENGTH (FT)	FINISHED ELEVATION (FT)
	G	X	H1	H2	W	L	EL
TWIN CITIES (2)	10	21	11	0	300	500	30.30
NEW HOPE TRACT SHAFT	6	19	13	40	200	235	33.00
CANAL RANCH RD SHAFT	3	15	12	20	200	235	36.50
TERMINOUS TRACT SHAFT	-3	13	16	20	250	300	37.00
KING ISLAND SHAFT	-12	13	25	15	200	235	36.00
LOWER ROBERTS ISLAND SHAFT (2)	-11	13	24	30	300	650	36.00
UPPER JONES TRACT SHAFT	-7	13	20	15	200	235	37.00
UNION ISLAND	-6	12	18	30	200	235	39.00
SURGE BASIN/RECEPTION SHAFT	40	40	0	0	-	-	7.0

* GROUND IMPROVEMENT DEPTHS ARE PRELIMINARY PENDING FUTURE GEOTECHNICAL EXPLORATION AND TESTING.

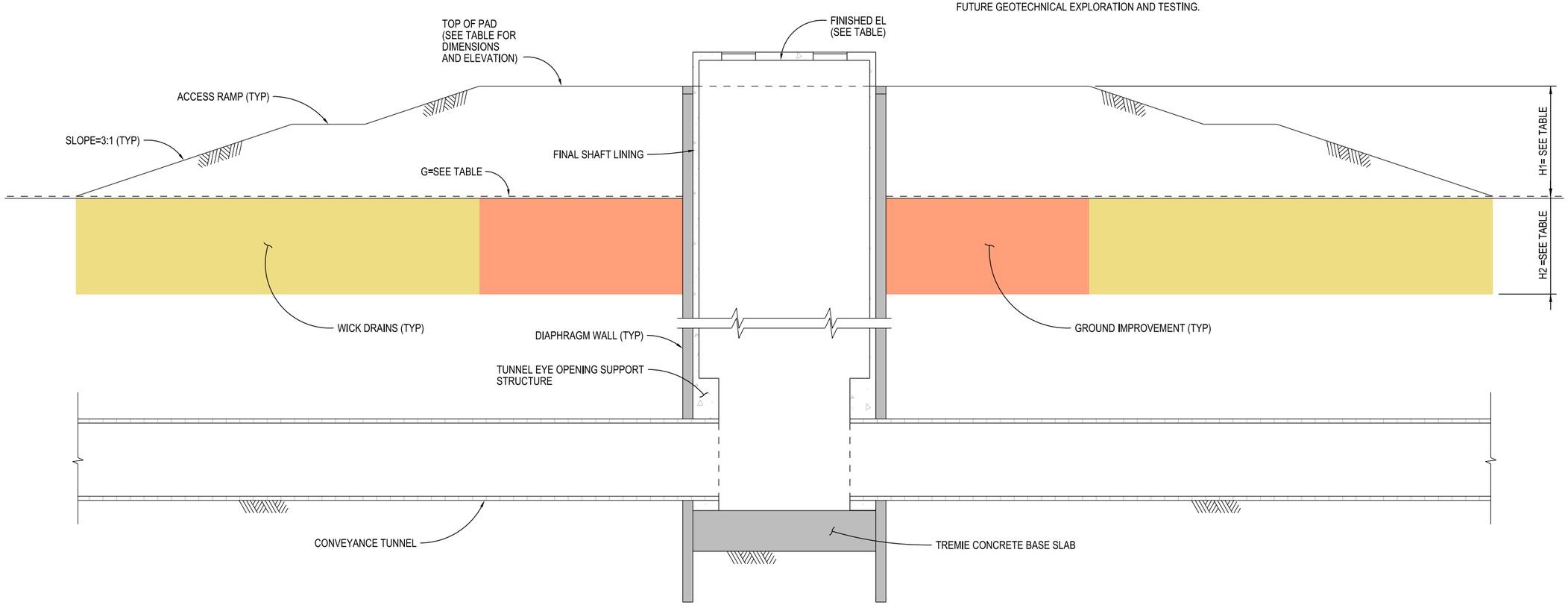

SHAFT PAD SECTION - WET EXCAVATION WITH DIAPHRAGM WALLS (SINGLE SHAFT SECTION SHOWN)

NOT TO SCALE

TUNNELS AND SHAFTS

VERIFY SCALE
BAR IS ONE INCH ON ORIGINAL DRAWING.
0 1"

REV	DATE	DESCRIPTION	SUB.	APPD
	12/23/2021	FINAL DRAFT BASELINE DRAWINGS		

DESIGNED: MARTIN ELLIS
DRAWN: RUSSELL TORADO
CHECKED: STEVE DUBNEWYCH
APPROVAL RECOMMENDED
APPROVAL BY

DELTA CONVEYANCE DESIGN & CONSTRUCTION AUTHORITY

ENGINEERING PROJECT REPORT
DELTA CONVEYANCE PROJECT
SINGLE TUNNEL - BETHANY RESERVOIR ALTERNATIVE

SHAFT PAD SECTION
WET EXCAVATION WITH D-WALL

PROJECT NO. W8X97000
SHEET NO. STB-S-5160TN
REV
SEQUENCE NO.

STB-S-5160TN_W8X97000.dgn

PLOT DATE:11/11/2021 PLOT TIME:2:16:53 PM

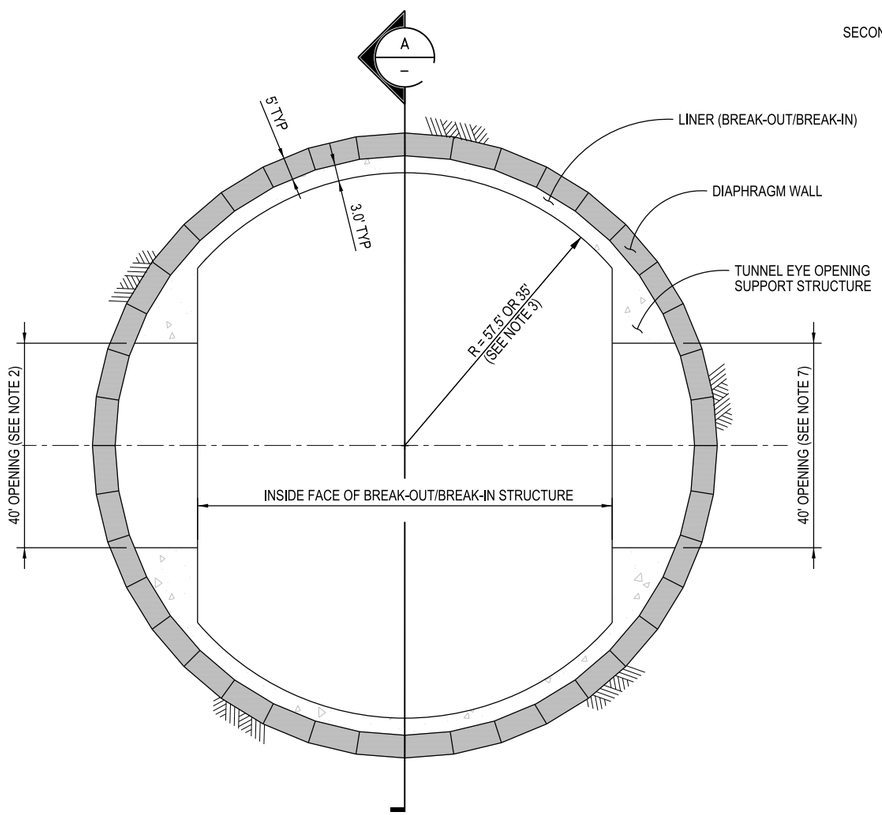

1 SHAFT PLAN
NOT TO SCALE

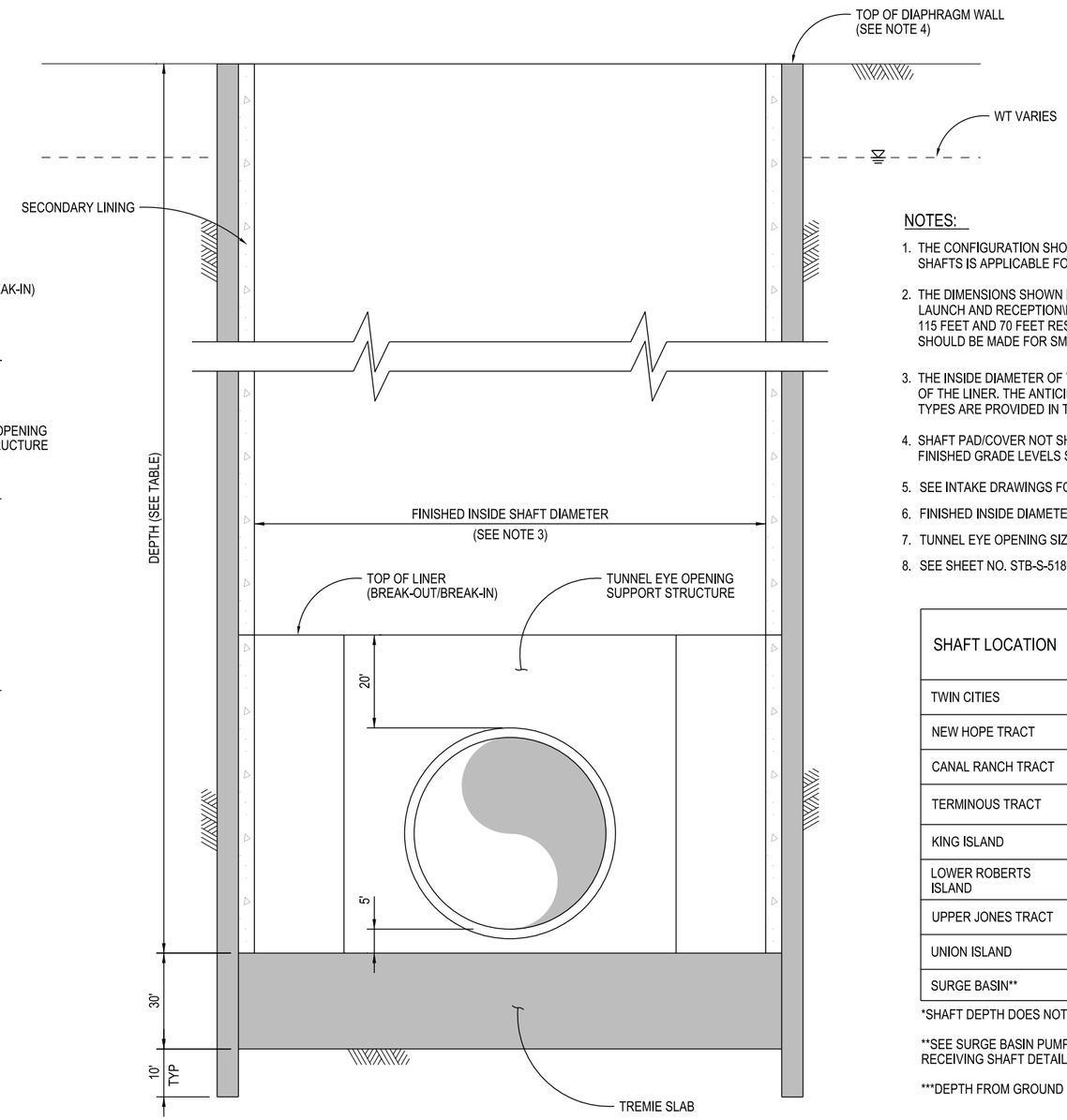

A SECTION
NOT TO SCALE

NOTES:

1. THE CONFIGURATION SHOWN HEREON FOR THE LAUNCH AND RECEPTION SHAFTS IS APPLICABLE FOR THE MAIN TUNNELS.
2. THE DIMENSIONS SHOWN HEREON ARE APPLICABLE FOR THE SINGLE DRIVE LAUNCH AND RECEPTION\MAINTENANCE SHAFTS WITH AN INSIDE DIAMETER OF 115 FEET AND 70 FEET RESPECTIVELY. ADJUSTMENTS TO THESE DIMENSIONS SHOULD BE MADE FOR SMALLER INSIDE DIAMETERS.
3. THE INSIDE DIAMETER OF THE SHAFTS IS MEASURED FROM THE INSIDE FACE OF THE LINER. THE ANTICIPATED INSIDE DIAMETERS OF THE VARIOUS SHAFT TYPES ARE PROVIDED IN TABLE.
4. SHAFT PAD/COVER NOT SHOWN FOR CLARITY, FINISHED GRADE LEVELS SHOWN ON DRAWING STC-S-5160TN.
5. SEE INTAKE DRAWINGS FOR SHAFT DETAILS AT INTAKES 2, 3 AND 5.
6. FINISHED INSIDE DIAMETERS SHOWN BASED ON 6,000 CFS OPTION.
7. TUNNEL EYE OPENING SIZE WOULD MATCH EXTERNAL SIZE OF TBM.
8. SEE SHEET NO. STB-S-5180TN FOR DOUBLE SHAFT DIMENSIONS.

SHAFT LOCATION	SHAFT TYPE	FINISHED INSIDE DIA. (FEET)	DEPTH* (FEET)
TWIN CITIES	DOUBLE LAUNCH	SEE NOTE 8	SEE NOTE 8
NEW HOPE TRACT	MAINTENANCE	70	171
CANAL RANCH TRACT	MAINTENANCE	70	169
TERMINOUS TRACT	RECEIVING	70	169
KING ISLAND	MAINTENANCE	70	172
LOWER ROBERTS ISLAND	DOUBLE LAUNCH	SEE NOTE 8	SEE NOTE 8
UPPER JONES TRACT	MAINTENANCE	70	177
UNION ISLAND	MAINTENANCE	70	178
SURGE BASIN**	RECEIVING	120	209***

*SHAFT DEPTH DOES NOT INCLUDE COLLAR HEIGHT ABOVE CONSTRUCTION PAD.

**SEE SURGE BASIN PUMPING PLANT AND OVERFLOW STRUCTURE DRAWINGS FOR RECEIVING SHAFT DETAILS

***DEPTH FROM GROUND SURFACE PRIOR TO BEING MODIFIED

TUNNELS AND SHAFTS

VERIFY SCALE
BAR IS ONE INCH ON ORIGINAL DRAWING.
0 1"

REV	DATE	DESCRIPTION	SUB.	APPD
	12/23/2021	FINAL DRAFT BASELINE DRAWINGS		

DESIGNED: MARTIN ELLIS
DRAWN: RUSSELL TORADO
CHECKED: STEVE DUBNEWYCH
APPROVAL RECOMMENDED
APPROVAL BY

DELTA CONVEYANCE DESIGN & CONSTRUCTION AUTHORITY

ENGINEERING PROJECT REPORT
DELTA CONVEYANCE PROJECT
SINGLE TUNNEL - BETHANY RESERVOIR ALTERNATIVE

SINGLE LAUNCH, RECEPTION, WORKING AND MAINTENANCE SHAFTS - PLAN AND SECTION

PROJECT NO. W8X97000
SHEET NO. STB-S-5170TN
REV
SEQUENCE NO.

STB-S-5170TN_W8X97000.dgn

PLOT DATE:11/11/2021 PLOT TIME:2:17:10 PM

NOTES:

1. THE FINISHED INSIDE DIAMETER OF THE SHAFTS IS MEASURED FROM THE INSIDE FACE OF THE LINER.
2. SHAFT PAD/COVER NOT SHOWN FOR CLARITY, FINISHED GRADE LEVELS SHOWN ON DRAWING STC-S-5160TN.
3. SEE INTAKE DRAWINGS FOR SHAFT DETAILS AT INTAKES 2, 3 AND 5.
4. TUNNEL EYE OPENING SIZE WOULD MATCH EXTERNAL SIZE OF TBM.
5. ONLY FORM AND BACKFILL SOUTH SHAFT AT LOWER ROBERTS ISLAND. BOTH SHAFTS AT TWIN CITIES SITE WILL NOT BE BACKFILLED.

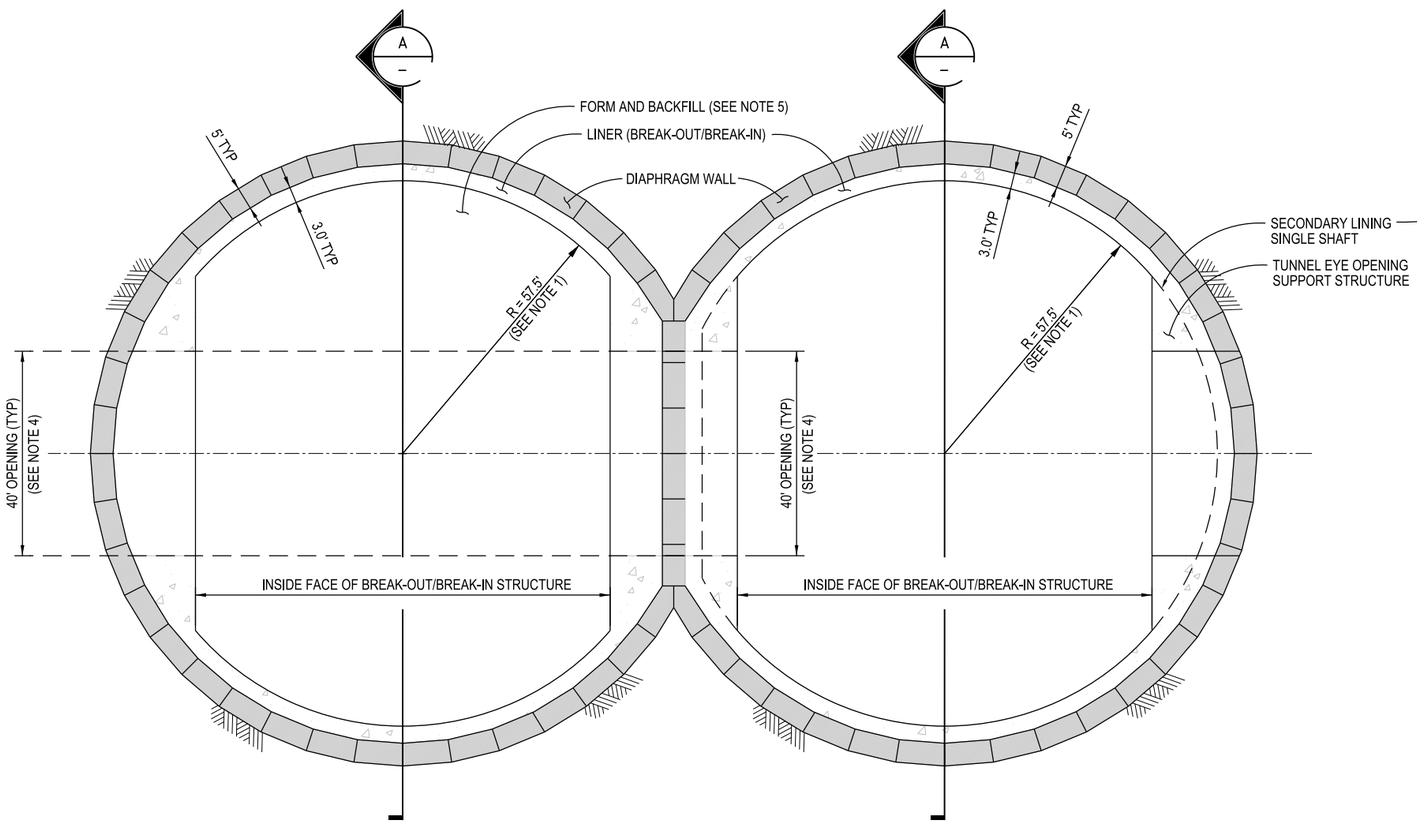

1 DOUBLE SHAFT PLAN
NOT TO SCALE

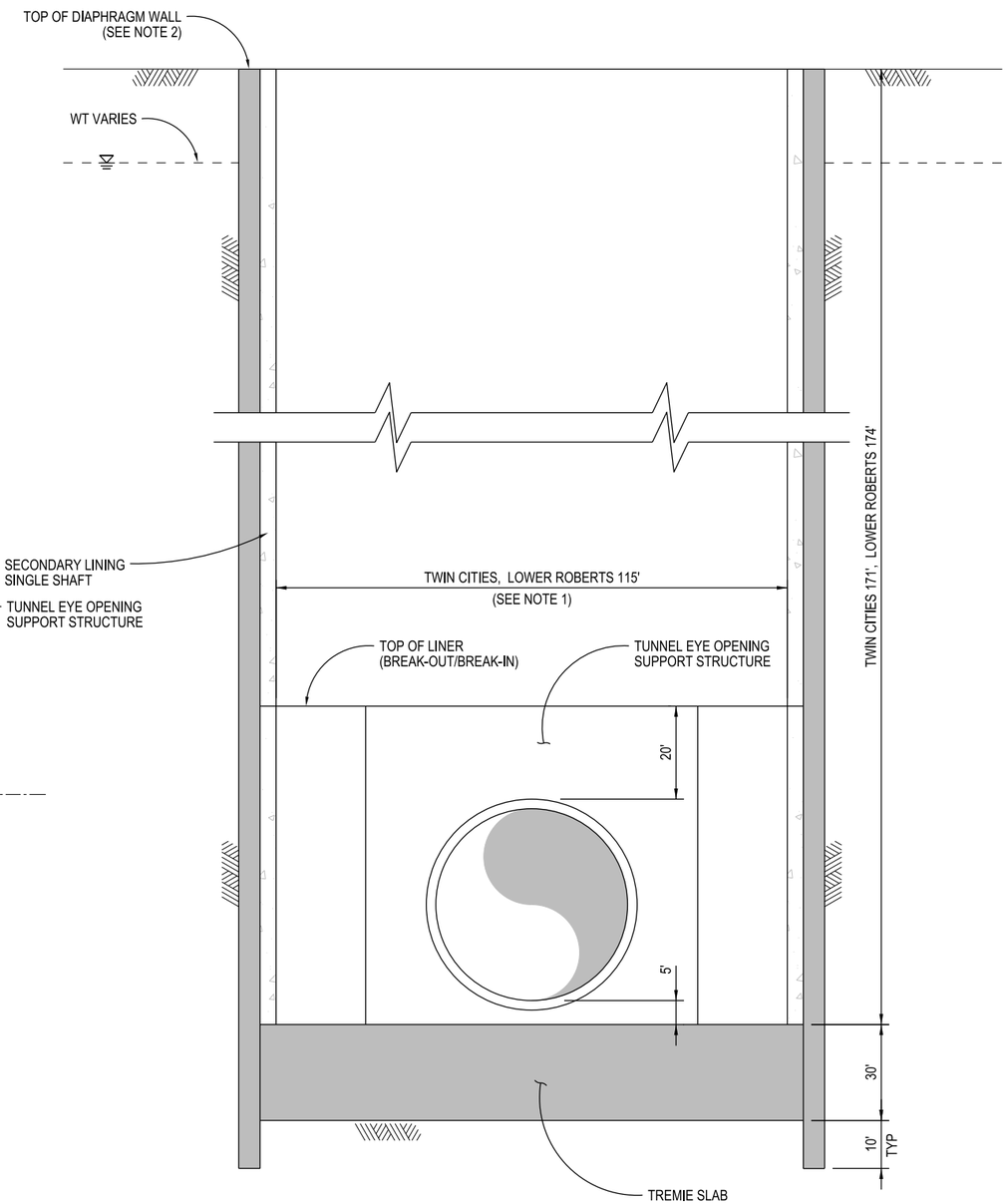

A SECTION
NOT TO SCALE

TUNNELS AND SHAFTS

VERIFY SCALE
BAR IS ONE INCH ON ORIGINAL DRAWING.
0 1"

REV	DATE	DESCRIPTION	SUB.	APPD
	12/23/2021	FINAL DRAFT BASELINE DRAWINGS		

DESIGNED: MARTIN ELLIS
DRAWN: RUSSELL TORADO
CHECKED: STEVE DUBNEWYCH
APPROVAL RECOMMENDED
APPROVAL BY

DELTA CONVEYANCE DESIGN & CONSTRUCTION AUTHORITY

ENGINEERING PROJECT REPORT
DELTA CONVEYANCE PROJECT
SINGLE TUNNEL - BETHANY RESERVOIR ALTERNATIVE

TWIN CITIES/LOWER ROBERTS DBL LAUNCH SHAFT PLAN AND SECTION

PROJECT NO. W8X97000
SHEET NO. STB-S-5180TN
REV
SEQUENCE NO.

STB-S-5180TN_W8X97000.dgn

PLOT DATE:11/12/2021 PLOT TIME:2:02:38 PM

NOTES:

1. FOR AQUEDUCT TUNNELS GROUND SUPPORT AND FINAL LINING DETAILS REFER TO BETHANY RESERVOIR ADUEDUCT DRAWINGS.

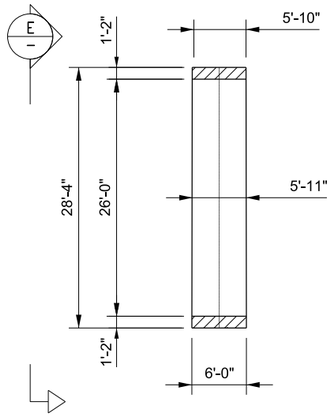

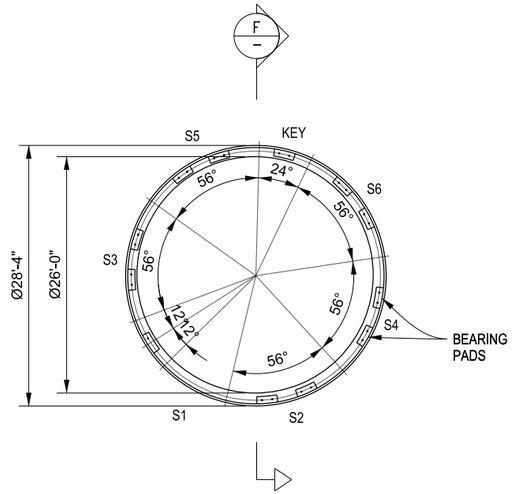

NOTES:

1. TAPER +/- 2.0" CORRESPONDING TO A MINIMUM CURVATURE RADIUS OF 1000 FEET.

F SECTION

VIEW FROM TUNNEL FACE TOWARDS TUNNEL

E ELEVATION

1 26' DIA. MAIN TUNNEL LINING DETAIL PROJECT CAPACITY FOR 3,000 CFS OPTION

NOT TO SCALE

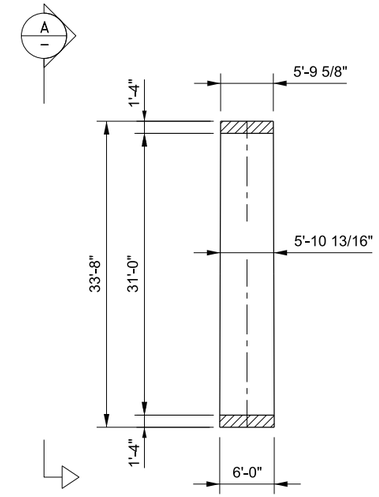

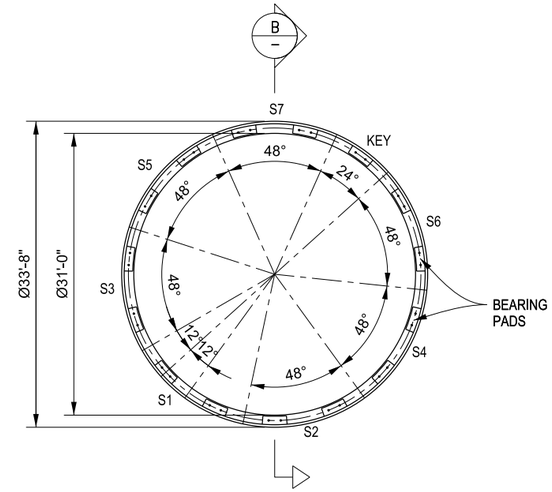

NOTES:

1. TAPER +/- 2.38" CORRESPONDING TO A MINIMUM CURVATURE RADIUS OF 1000 FEET.

B SECTION

VIEW FROM TUNNEL FACE TOWARDS TUNNEL

A ELEVATION

2 31' DIA. MAIN TUNNEL LINING DETAIL PROJECT CAPACITY FOR 4,500 CFS OPTION

NOT TO SCALE

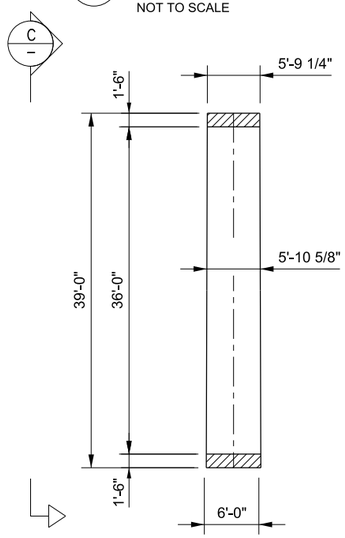

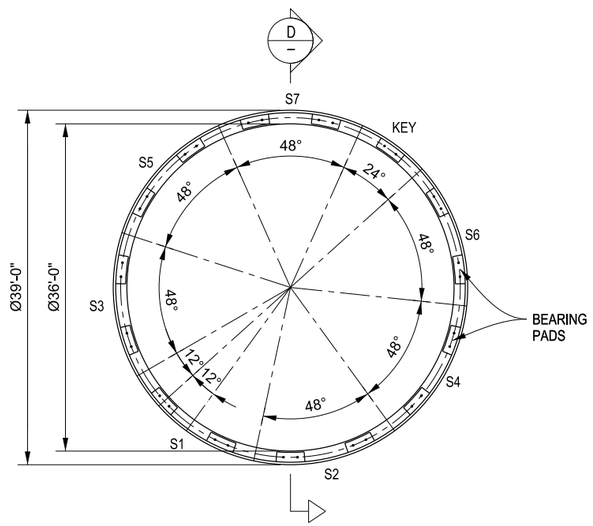

NOTES:

1. TAPER +/- 2.75" CORRESPONDING TO A MINIMUM CURVATURE RADIUS OF 1000 FEET.

D SECTION

VIEW FROM TUNNEL FACE TOWARDS TUNNEL

C ELEVATION

3 36' DIA. MAIN TUNNEL LINING DETAIL PROJECT CAPACITY FOR 6,000 CFS OPTION

NOT TO SCALE

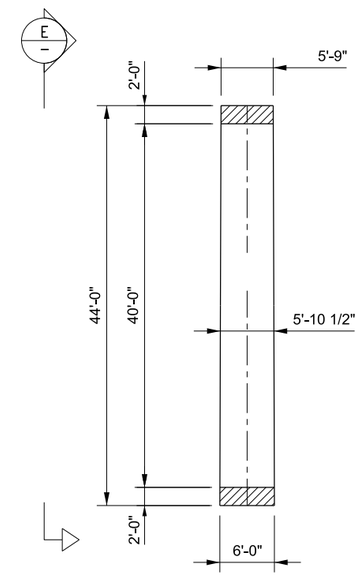

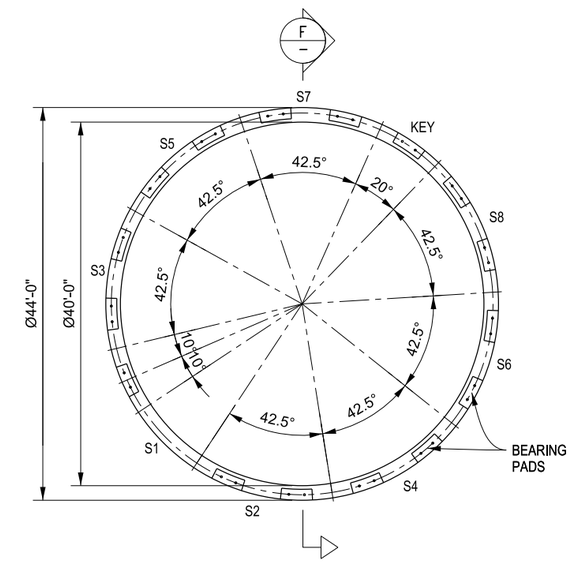

NOTES:

1. TAPER +/- 3.0" CORRESPONDING TO A MINIMUM CURVATURE RADIUS OF 1000 FEET.

F SECTION

VIEW FROM TUNNEL FACE TOWARDS TUNNEL

E ELEVATION

4 40' DIA. MAIN TUNNEL LINING DETAIL PROJECT CAPACITY FOR 7,500 CFS OPTION

NOT TO SCALE

TUNNELS AND SHAFTS

VERIFY SCALE
BAR IS ONE INCH ON ORIGINAL DRAWING.
0 1"

REV	DATE	DESCRIPTION	SUB.	APPD
	12/23/2021	FINAL DRAFT BASELINE DRAWINGS		

DESIGNED: MARTIN ELLIS
DRAWN: JUNE KASHIWADA
CHECKED: STEVE DUBNEWYCH
APPROVAL RECOMMENDED
APPROVAL BY

DELTA CONVEYANCE DESIGN & CONSTRUCTION AUTHORITY

ENGINEERING PROJECT REPORT
DELTA CONVEYANCE PROJECT
SINGLE TUNNEL - BETHANY RESERVOIR ALTERNATIVE

MAIN TUNNELS
SEGMENT LINING OPTIONS

PROJECT NO. W8X97000
SHEET NO. STB-S-5190TN
REV
SEQUENCE NO.

STB-S-5190TN_W8X97000.dgn

PLOT DATE:11/11/2021 PLOT TIME:2:17:05 PM